Enriching Lives

ILLUSTRATED PARTS CATALOGUE & WORKSHOP MANUAL

FOR

4K1080TA ENGINE FOR POWER GENERATION A/C – GOEM

APPLICATION CODE NO. 4H.7902

KIRLOSKAR OIL ENGINES LIMITED
Regd. Office: Laxmanrao Kirloskar Road, Khadki, Pune - 411 003, (India).
Tel.: +91 (20) 2581 0341, 2581 5341. Fax: +91 (20) 2581 3208, 2581 0209.
Website: www.koel.co.in

APRIL - 2014

PUBLICATION NO. 3H.382.28.0.00

GROUP INDEX
APPLICATION CODE 4H.7902

SR.NO.	DESCRIPTION	GROUP NO.	QTY.	PAGE NO.
1	FUEL TANK UNIT ASSEMBLY	06.22PM.01	1	4
2	CYLINDER LINER.(105 DIA)	2H.008	4	5
3	DELIVERY BODY.	2H.013	1	6
4	SENSOR AND GAUGES	4H.01PM.02	1	7
5	LUBE OIL PRESSURE SENDOR ASSEMBLY	4H.01PM.20	1	8
6	ACTUATOR AND LINKAGE ASSEMBLY	4H.02PM.02	1	9, 10
7	ECU ASSEMBLY	4H.02PM.03	1	11
8	FAN AND SPACER ASSEMBLY	4H.03PM.02	1	12
9	FLYWHEEL AND FLYWHEEL HOUSING. ASSLY.	4H.04PM.01	1	13
10	WATER PUMP (282.5 CRS)	4H.052	1	14
11	STARTER MOUNTING ASSEMBLY	4H.06PM.01	1	15
12	CHARGING ALTERNATOR MOUNTING	4H.07PM.01	1	16
13	SUCTION HOSE ASSLY	4H.08PM.02	1	17
14	AIR INTAKE SYSTEM ASSEMBLY	4H.08PM.03	1	18
15	ALTERNATOR COUPLING FASTNERS	4H.09PK.03	1	19
16	RADIATOR ASSEMBLY-4K 125 KVA	4H.1005.30	1	20
17	KIT GROUP S/F CANOPY (4RTA, 4K& 6K - CPCB II)	4H.104.4	1	21
18	COOLING SYSTEM	4H.10PK.02	1	22, 23
19	COOLING SYSTEM	4H.10PM.05	1	24, 25
20	GEAR CASING (COMPACT-4K/6K)	4H.1174.3	1	26, 27
21	EXHAUST SYSTEM	4H.11PK.02	1	28
22	FIP GEAR COVER AND FEED PUMP ASSLY.	4H.1284	1	29
23	FIP GEAR WITH FACIAL CAM	4H.1284.1	1	30
24	AVM ASSEMBLY	4H.12PM.02	1	31
25	CRANKCASE (MONOBLOCK) (4K 1080-4 VALVE-125 KVA)	4H.1301.2	1	32 TO 35
26	CRANK SHAFT (4K 1080 TA)	4H.1302	1	36
27	SUCTION TUBE (4K ENGINE) FOR SHEET METAL SUMP	4H.1385.1	1	37
28	LUB OIL SUMP (4K ENGINE) (SHEET METAL)	4H.1386.2	1	38
29	CAMSHAFT (4K1080 4V ENGINE)	4H.1387.3	1	39
30	DIPSTICK (4K-SHEET METAL SUMP)	4H.1388.2	1	40
31	BREATHER HOSE	4H.13PM.02	1	41
32	TURBOCHARGER (4K1080 4V, CPCB II)	4H.1437.4	1	42
33	TURBOCHARGER OIL PIPING	4H.1437.5	1	43, 44
34	INJECTOR ASSEMBLY (4K1080 4V)	4H.1454	4	45
35	ALTERNATOR MOUNTING WITH POLY V BELT 6PK	4H.1481.6	1	46, 47
36	WATER PUMP PULLEY & FASTENERS	4H.1483.12	1	48
37	POLY V BELT (FENNER, 6PK-1190)	4H.1493	1	49
38	LUBE OIL DRAIN ARRANGEMENT	4H.14PM.01	1	50
39	FUEL PUMP (4K-125KVA CPCB II))	4H.1534.2	1	51
40	FUEL PIPING ASSEMBLY	4H.15PM.02	1	52, 53
41	BREATHER PIPE	4H.161.3	1	54
42	CYLINDER HEAD (4 VALVE)	4H.1613	1	55 TO 58

SR.NO.	DESCRIPTION	GROUP NO.	QTY.	PAGE NO.
43	ROCKER SUPPORT ASSEMBLY (4 VALVES)	4H.1614	1	59 TO 61
44	PUSHROD & TAPPETS	4H.1614.1	4	62
45	ROCKER BOX (4 VALVE)	4H.1624	1	63
46	ROCKER COVER (SUITABLE FOR 4 VALVE HEAD)	4H.1625	1	64
47	INLET MANIFOLD (4 VALVE)	4H.1629	1	65
48	EXHAUST MANIFOLD (4 VALVE)	4H.1630	1	66
49	THERMOSTAT HOUSING	4H.1641	1	67, 68
50	PISTON GALLERY COOLED (4K 4V ENGINE)	4H.1650.1	4	69, 70
51	LEAK OFF PIPE	4H.1658.2	1	71, 72
52	HIGH PRESSURE PIPE (SUITABLE FOR 4 VALVE HEAD)	4H.1659	1	73
53	LEVEL 1 KG934 CONTROLLER AND CONNECTOR ASSEMBLY	4H.16PK.01	1	74, 75
54	CONTROL PANEL CONNECTOR ASSEMBLY	4H.16PK.03	1	76
55	CENTRIFUGE LUB OIL FILTER	4H.1939	1	77
56	FUEL FILTER & MTG. (4K1080 4VALVE)	4H.1942.2	1	78, 79
57	LUB OIL PUMP (4K ENGINE)	4H.1944	1	80 TO 82
58	GAS OUTLET MANIFOLD & SUPPORT	4H.1951	1	83
59	LIFTING HOOK (4K1080 4 VALVE, CPCB II)	4H.1952	1	84
60	FLANGE AND FASTENERS FOR TAIL PIPE	4H.21PK.03	1	85
61	CAC PIPE (4K1080 4V)	4H.224.12	1	86, 87
62	SUPPORT FOR CAC PIPE (STAGE 1)	4H.224.13	1	88
63	SUPPORT FOR CAC PIPE (STAGE 2)	4H.224.14	1	89
64	ENGINE MOUNTING FOOT AND FASTENERS	4H.228.14	1	90
65	ENGINE MTG.FOOT (FLYWHEEL SIDE)	4H.228.6	1	91
66	INTERMEDIATE GEAR AND SUPPORT	4H.237.3	1	92
67	SET OF STICKERS	4H.23PM.01	1	93, 94
68	ENGINE WIRING HARNESS	4H.27PM.02	1	95
69	EXHAUST SILENCER FOR 125KVA	4H.792.40	1	96
70	LUB OIL COOLER & SPIN ON TYPE FILTER	6H.014	1	97, 98
71	FAN DRIVE ARRANGEMENT	6H.031.6	1	99, 100
72	OIL SEAL HOUSING	6H.045.1	1	101
73	CRANK PULLEY FOR 6PK BELT (4K-125 KVA)	6H.1130.5	1	102
74	POLY V BELT: 7PK FOR FAN DRIVE	6H.1171.3	1	103
75	CONNECTING ROD	6H.179	4	104
76	K OIL PREMIUM 15 W 40 CI4	82.110.16	17	105
77	SET OF JOINTS	4H.1806.71	1	106, 107
78	SET OF COPPER WASHERS	4H.1806.72	1	108
79	SET OF 'O' RINGS	4H.1806.73	1	109
80	SET OF BREANINGS		1	110

NOTE: - AS CONTINUOUS IMPROVEMENTS ARE CONTEMPLATED THE ILLUSTRATION AND DESCRIPTIONS ARE NOT BINDING.

TITLE: - FUEL TANK UNIT ASSEMBLY	GROUP: - 06.22PM.01

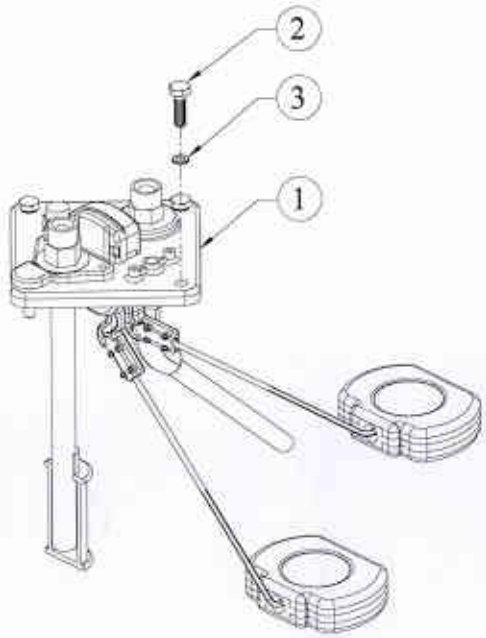

SR.NO.	PART NO.	DESCRIPTION	QTY.	REMARKS
1	4H.1649.24.0.00	FUEL TANK UNIT S/F 180 EFFECTIVE TANK HEIGHT	1	
2	50.003.05.020.	SET SCREW - M5X0.8X20 - 8.8	4	
3	50.506.05.000.	PLAIN MACHINED WASHER - M5	4	

TITLE: -CYLINDER LINER. (105 DIA)	**GROUP:** - 2H.008

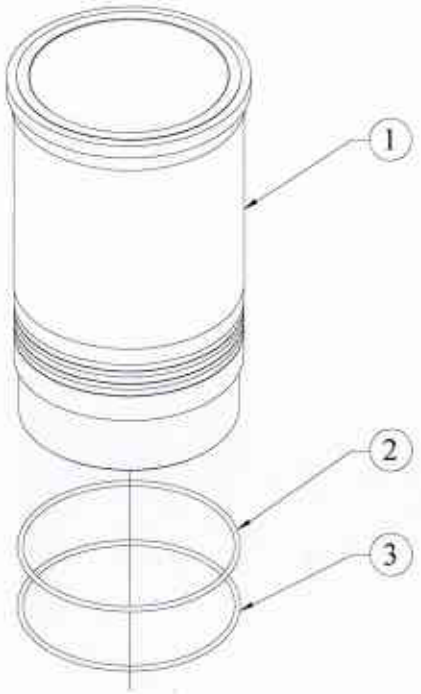

SR.NO.	PART NO.	DESCRIPTION	QTY.	REMARKS
1	2H.008.01.0.00	CYLINDER LINER (105mm DIA.)A-GROUP	1	
2	2H.008.07.0.00	O RING (FOR CYL.LINER)	2	
3	2H.008.11.0.00	O RING FOR CYLINDER LINER (VITON MATERIAL)	1	

TITLE: - DELIVERY BODY	**GROUP: -** 2H.013

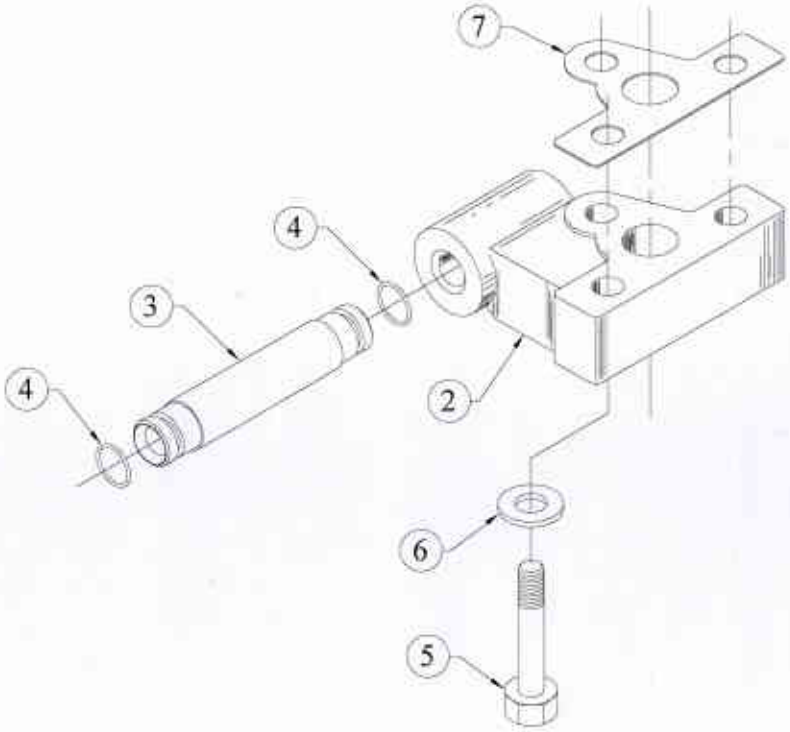

SR.NO.	PART NO.	DESCRIPTION	QTY.	REMARKS
*1	2H.013.10.0.00	DELIVERY BODY ASSEMBLY	1	CONSISTING OF SR.NO. 2 TO 4
2	2H.013.01.0.00	DELIVERY BODY(FINISH)	1	
3	2H.014.01.0.00	DELIVERY TUBE	1	
4	2H.014.02.0.00	O RING(FOR DELIVERY TUBE)	2	
5	50.002.08.045.	SET BOLT - M8X1.25X45 - 8.8	3	
6	50.506.08.000.	PLAIN MACHINED WASHER - M8	3	
7	2H.013.11.0.00	JOINT FOR DELIVERY BODY	1	

TITLE: - SENSOR AND GAUGES	**GROUP: -** 4H.01PM.02

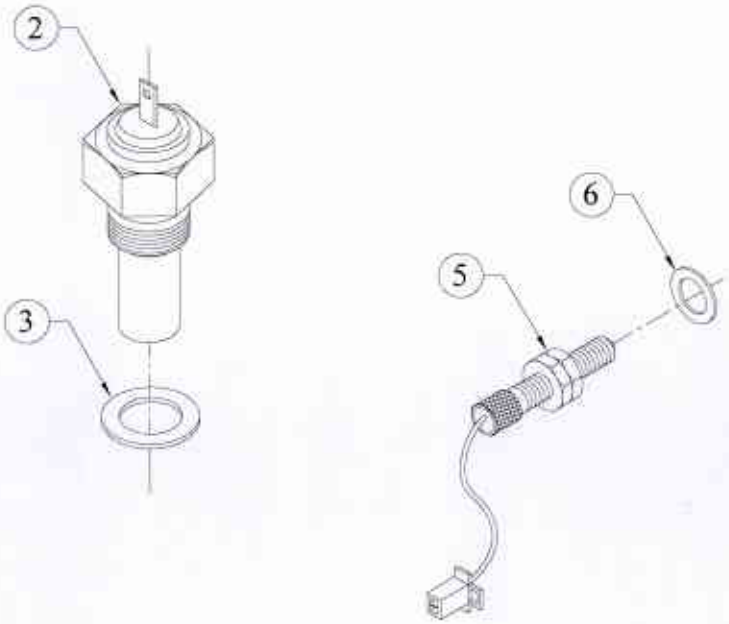

SR.NO.	PART NO.	DESCRIPTION	QTY.	REMARKS
*1	4H.01PM.10.0.00	WATER TEMPERATURE SENSOR ASSEMBLY	1	CONSISTING OF SR. NO.2,3
2	46.085.02.0.00	SENSOR UNIT (FOR ELEC TEMP GAUGE)	1	
3	50.508.11.000.	COPPER WASHER (14X18)	1	
*4	4H.01PM.30.0.00	MAGNETIC PICKUP ASSEMBLY	1	CONSISTING OF SR. NO.5,6
5	F6.741.16.0.00	MAGNETIC PICK UP 16X1.5 THREADING (UNITCH MAKE) FOR 250 KVA WITH 110 SERIES MSSL CON.	1	
6	50.506.16.000.	PLAIN MACHINED WASHER - M16	1	

TITLE: - LUBE OIL PRESSURE SENDOR ASSEMBLY	GROUP: - 4H.01PM.20

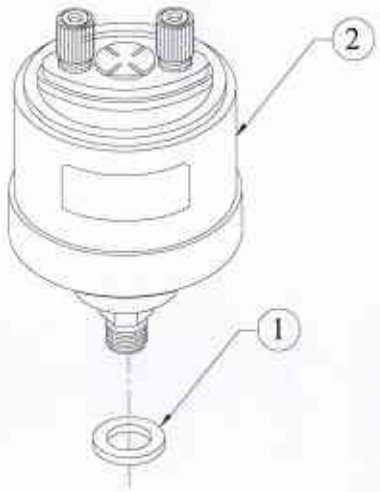

SR.NO.	PART NO.	DESCRIPTION	QTY.	REMARKS
1	50.508.10.000.	COPPER WASHER (12X18)	1	
2	2H.092.11.0.00	LUBE OIL PRESSURE SENDOR, (SENSOR + SWITCH), VDO SIEMENCE (INDIA), 2 TERMINAL, BODY GROUND WITH IMPORTED BOBBIN ASSEMBLY	1	

TITLE: - ACTUATOR AND LINKAGE ASSEMBLY	GROUP: - 4H.02PM.02

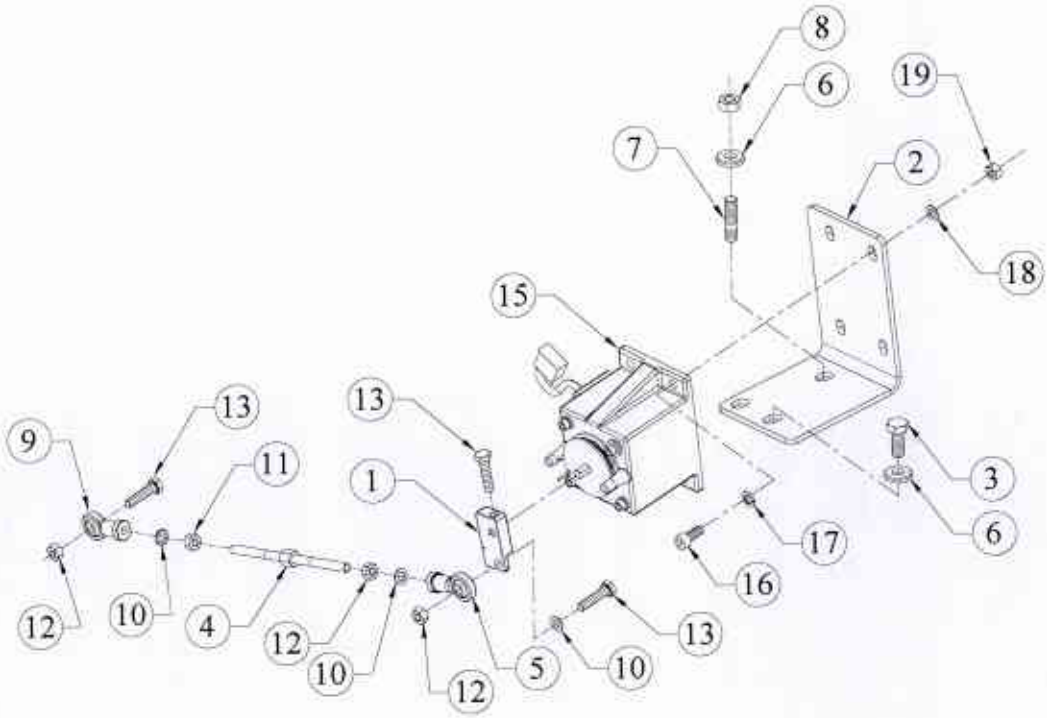

SR.NO.	PART NO.	DESCRIPTION	QTY.	REMARKS
1	4H.472.14.0.00	LEVER FOR ELE.ACTUATOR	1	
2	4H.472.67.0.PR	BRACKET FOR ACTUATOR (4K) CPCB STAGE-II	1	
3	50.003.08.020.	SET SCREW - M8X1.25X20 - 8.8	2	
4	4H.472.02.0.00	STUD COUPLER (115 MM LONG)	1	
5	29.224.28.0.00	R.E.BEARING M6 RH THREADS	1	
6	50.548.08.000.	SPL.PLAIN M/CED WASHER	3	
7	50.010.08.020.	STUD - M8X1.25X20 - 8.8	1	
8	50.006.08.000.	NUT- M8X1.25 - GR.8	1	
9	29.224.29.0.00	R.E.BEARING M6 L.H.THREADS	1	
10	50.506.06.000.	PLAIN MACHINED WASHER - M6	3	
11	4H.472.03.0.00	NUT M6 X 1 LH THREADS	1	
12	50.006.06.000.	NUT - M6X1 - GR.8	3	
13	50.003.06.025.	SET SCREW - M6X1X25 - 8.8	3	
*14	4H.472.80.0.00	ACTUATOR ASSEMBLY	1	CONSISTING OF SR.NO. 15 TO 19
15	4H.1720.05.0.PR	ACTUATOR WITH REVERSE SPRING	1	

TITLE: - ACTUATOR AND LINKAGE ASSEMBLY	**GROUP: -** 4H.02PM.02

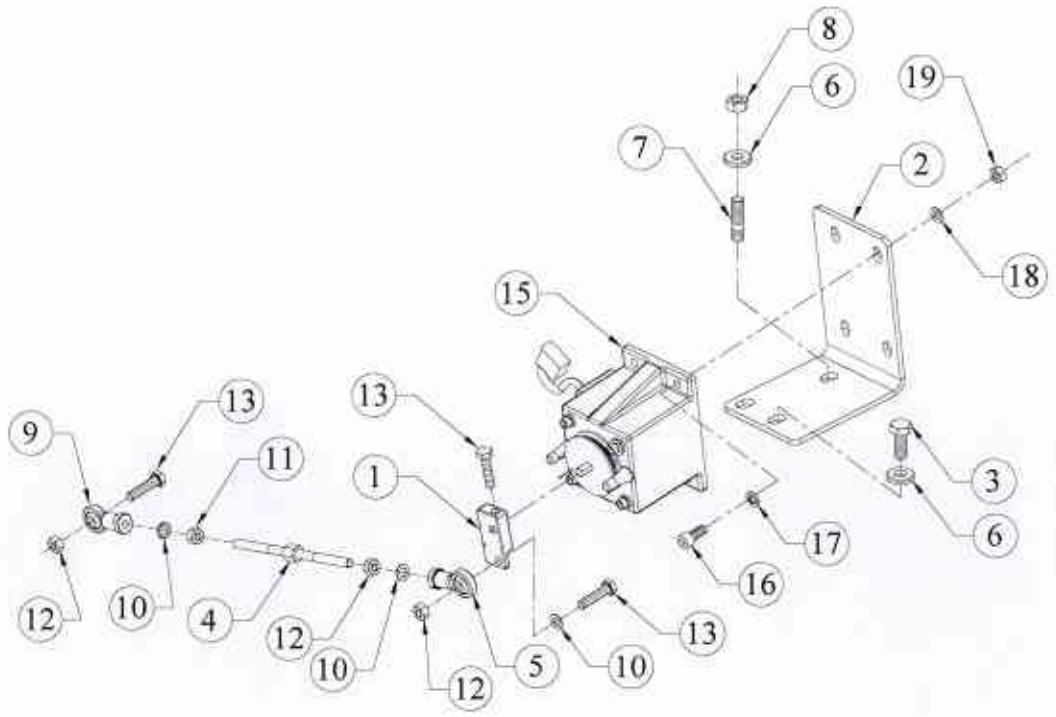

SR.NO.	PART NO.	DESCRIPTION	QTY.	REMARKS
16	50.011.06.020.	SOCKET HEAD SCREW – M6X1X20 - 8.8	1	
17	50.505.06.000.	SPRING WASHER - M6	4	
18	50.506.06.000.	PLAIN MACHINED WASHER - M6	4	
19	50.006.06.000.	NUT - M6X1 - GR.8	4	

TITLE: - ECU ASSEMBLY	**GROUP: -** 4H.02PM.03

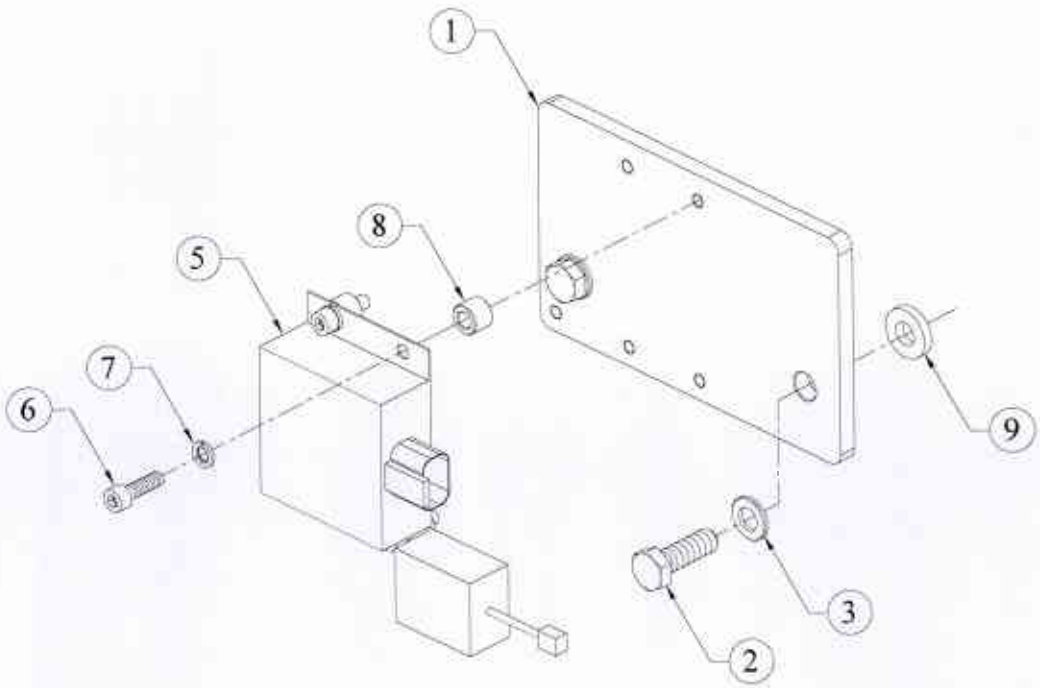

SR.NO.	PART NO.	DESCRIPTION	QTY.	REMARKS
1	4H.472.09.0.00	BRACKET FOR ACTUATOR	1	
2	50.002.10.030.	SET BOLT - M10X1.5X30 - 8.8	2	
3	50.506.10.000.	PLAIN MACHINED WASHER - M10	2	
*4	4H.472.40.0.00	ECU ASSEMBLY	1	CONSISTING OF SR. NO. 5 TO 8
5	4H.1720.03.0.PR	ECU B12 & VOLTAGE SUPPRESSOR ASSEMBLY FOR 4K 125kVA	1	
6	50.011.06.020.	SOCKET HEAD SCREW - M6X1X20 - 8.8	4	
7	50.505.06.000.	SPRING WASHER - M6	4	
8	4H.472.05.0.00	SPACER 7ID, 13OD & 10 MM LONG	4	
9	02.022.06.0.00	WASHER	2	

TITLE: - FAN AND SPACER ASSEMBLY	**GROUP: -** 4H.03PM.02

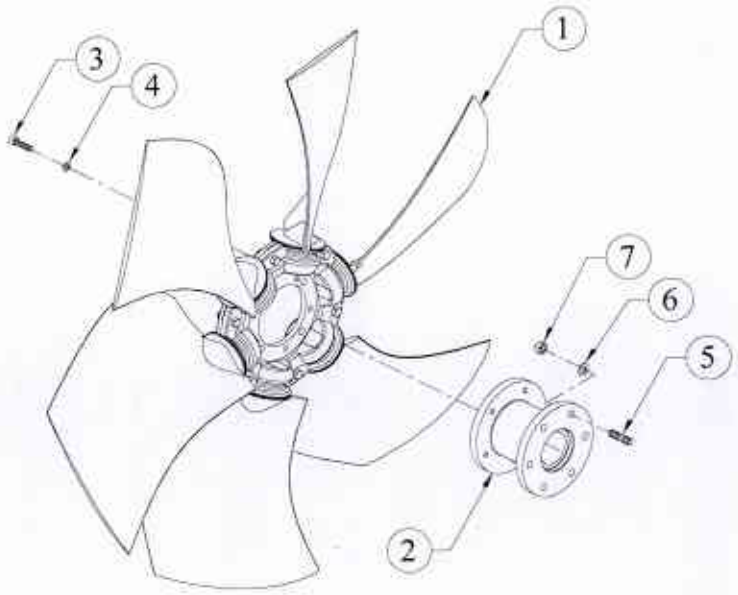

SR.NO.	PART NO.	DESCRIPTION	QTY.	REMARKS
1	4H.1717.03.0.00	FAN ASSLY: 26" PUSHER TYPE	1	
2	4H.1717.07.0.PR	SPACER FOR FAN	1	
3	50.076.06.025	ALLEN SCREW	5	
4	50.506.06.000	PLAIN MACHINED WASHER - M6	5	
5	50.010.08.020	STUD - M8X1.25X20 - 8.8	6	
6	50.506.08.000	PLAIN MACHINED WASHER - M8	6	
7	50.006.08.000	NUT- M8X1.25 - GR.8	6	

TITLE: - FLYWHEEL AND FLYWHEEL HOUSING. ASSEMBLY	GROUP: - 4H.04PM.01

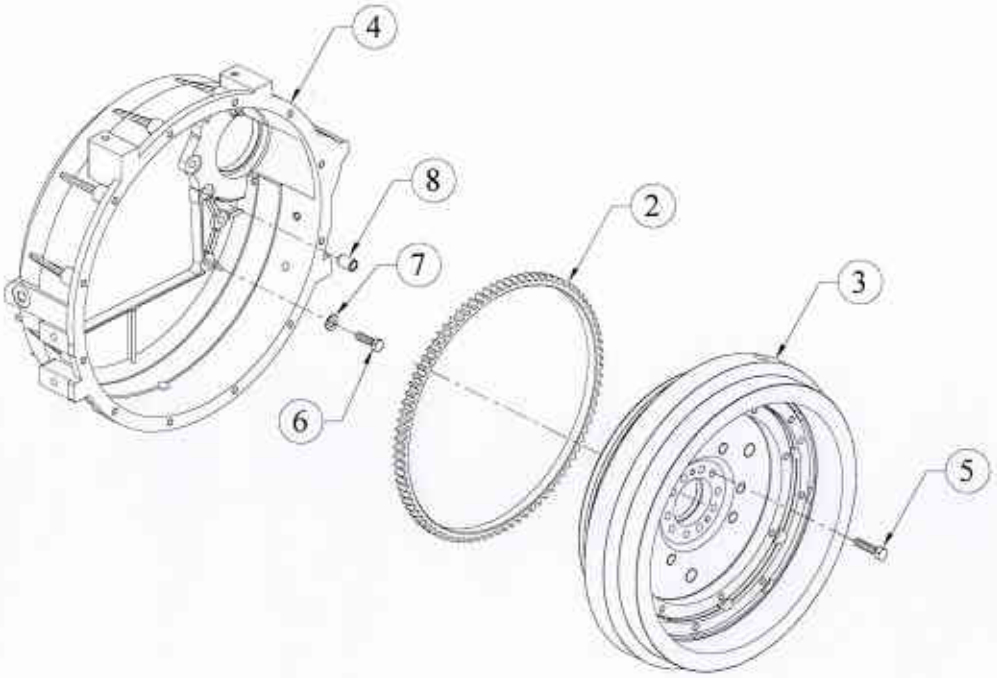

SR.NO.	PART NO.	DESCRIPTION	QTY.	REMARKS
*1	03.050.10.0.00	ASSLY OF FLYWHEEL & ST RING	1	CONSISTING OF SR. NO. 2,3
2	03.035.02.0.00	STARTER RING 121 TEETH, 3.175 MODULE	1	
3	03.050.01.0.00	FLYWHEEL(FOR GENSET)	1	
4	3H.085.03.0.00	FLYWHEEL HOUSING (FINISH)	1	
5	04.024.02.0.00	BOLT FOR FLYWHEEL (M10X45 LONG)	10	
6	50.003.10.035.	SET SCREW - M10X1.5X35 - 8.8	8	
7	65.061.15.0.00	HARD WASHER	8	
8	4H.001.13.0.00	HOLLOW DOWEL (16 DIA)	2	

TITLE: - WATER PUMP (282.5 CRS)	GROUP: - 4H.052

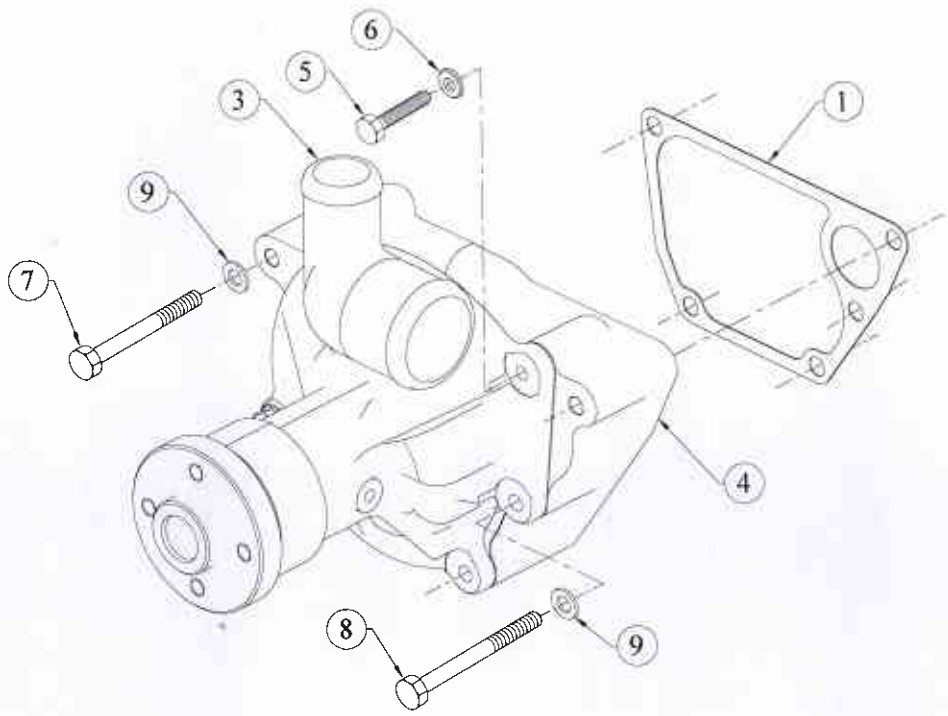

SR.NO.	PART NO.	DESCRIPTION	QTY.	REMARKS
1	4H.052.12.0.00	JOINT FOR DELIVERY VOLUTE	1	
*2	4H.052.40.0.00	WATER PUMP SUB ASSEMBLY	1	CONSISTING OF SR. NO. 3
3	4H.052.20.0.00	W.P.ASSLY.WITH DEL.VOLUTE (282.5 CRS) (TBK MAKE)	1	CONSISTING OF SR. NO. 4 TO 6
4	4H.052.70.0.00	SUB ASSEMBLY OF DILEVERY VOLUTE	1	
5	50.003.08.025.	SET SCREW - M8X1.25X25 - 8.8	3	
6	10.020.03.0.00	HARD WASHER (F)	3	
7	50.002.10.060.	SET BOLT - M10X1.5X60 - 8.8	3	
8	50.002.10.070.	SET BOLT - M10X1.5X70 - 8.8	2	
9	50.506.10.000.	PLAIN MACHINED WASHER - M10	5	

TITLE: - STARTER MOUNTING ASSEMBLY	GROUP: - 4H.06PM.01

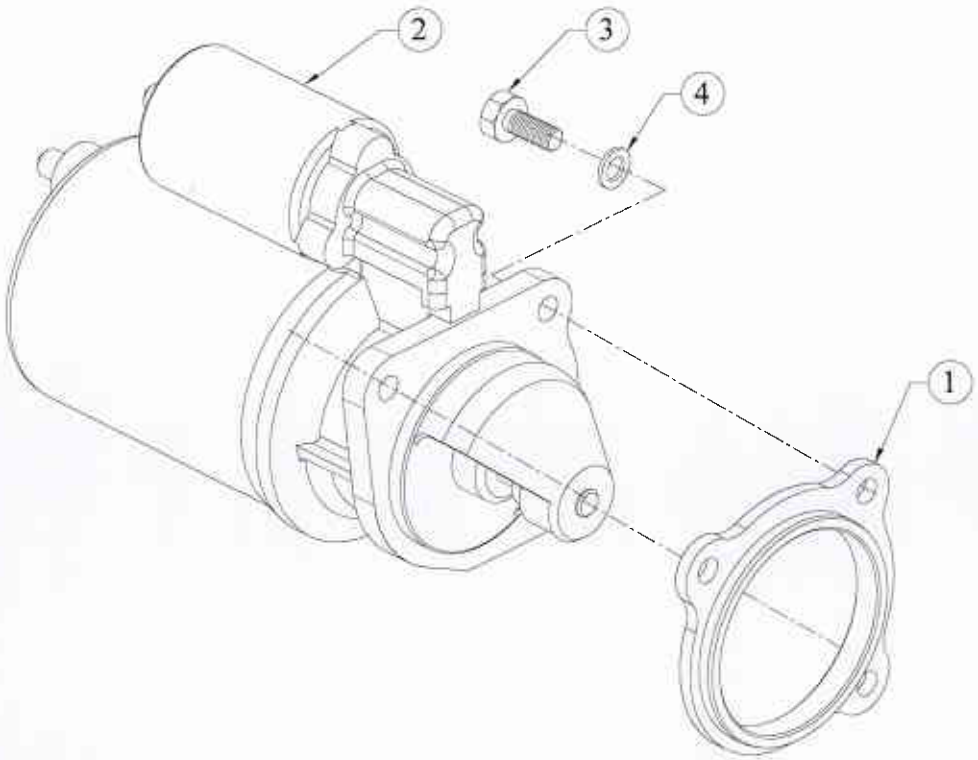

SR.NO.	PART NO.	DESCRIPTION	QTY.	REMARKS
1	4H.038.02.0.00	FLANG FOR STARTER 13 TOTAL AND 6 MM EFFECTIVE WIDTH	1	
2	2H.301.01.0.00	MICO STARTER 12VDC 2.7KW SUITABLE FOR - 20 deg.	1	
3	50.506.10.000.	PLAIN MACHINED WASHER - M10	3	
4	50.003.10.030.	SET SCREW - M10X1.5X30 - 8.8	3	

TITLE: - CHARGING ALTERNATOR MOUNTING	**GROUP: -** 4H.07PM.01

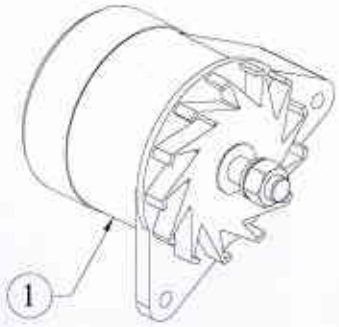

SR.NO.	PART NO.	DESCRIPTION	QTY.	REMARKS
1	3H.315.01.0.00	ASSEMBLY CHARGING ALTERNATOR 12V, 35A, MICO MAKE K1 MODEL NO.F 002 G1B 342 120 DEGREE MOUNTING	1	

TITLE: - SUCTION HOSE ASSY	GROUP: - 4H.08PM.02

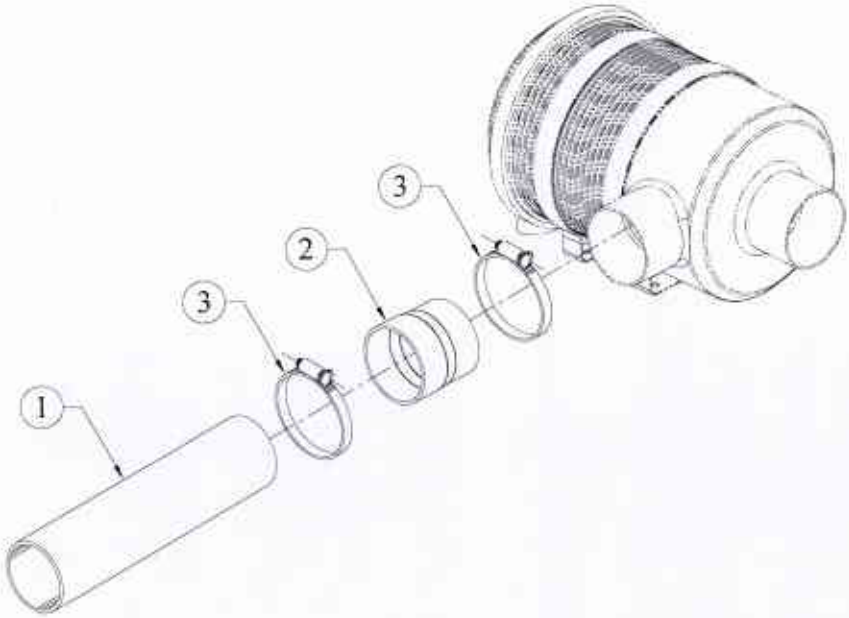

SR.NO.	PART NO.	DESCRIPTION	QTY.	REMARKS
1	4H.412.05.0.00	PVC PIPE FOR AIR CLEANER (SUCTION SIDE)	1	
2	6H.412.06.0.00	HOSE FOR AIR SUCTION PIPE	1	
3	50.519.17.000.	WORM DRIVE HOSE CLIP (127 MM)	2	

TITLE: - AIR INTAKE SYSTEM ASSEMBLY	GROUP: - 4H.08PM.03

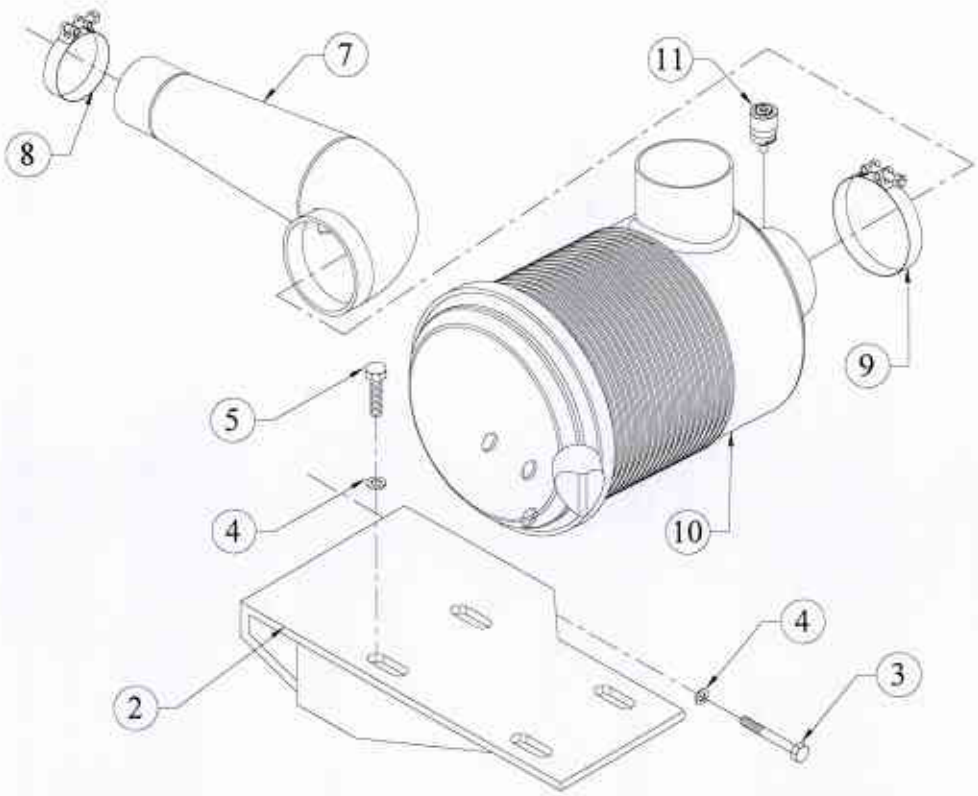

SR.NO.	PART NO.	DESCRIPTION	QTY.	REMARKS
1	4H.08PM.30.0.00	AIR CLEARNER MOUNTING BRACKET SUB ASSEMBLY	1	CONSISTING OF SR.NO. 2 TO 5
2	4H.412.09.0.PR	BRACKET FOR AIR CLEANER	1	
3	50.002.10.055	SET BOLT - M10X1.5X55 - 8.8	4	
4	50.506.10.000	PLAIN MACHINED WASHER - M10	8	
5	50.003.10.025	SET SCREW - M10X1.5X25 - 8.8	4	
6	4H.08PM.40.0.00	AIR CLEANER SUB ASSEMBLY	1	CONSIST OF SR.NO. 7 TO 11
7	6H.412.12.0.PR	HOSE FOR AIR CLEANER	1	
8	F6.377.16.0.00	JUPITER T -BOLT CLAMP S/F 83MM O.D	1	
9	06.376.04.0.00	T BOLT CLAMP KLIPCO TB108 / JUPITOR (108 TO 116 DIA)	1	
10	4H.412.03.0.00	AIR CLEANER ASSEMBLY (9.5 M3/MIN)	1	
11	F6.504.02.0.00	1/8" NPT-24" RANGE RESTRICTION INDICATOR	1	

TITLE: - ALTERNATOR COUPLING FASTNERS	GROUP: - 4H.09PK.03

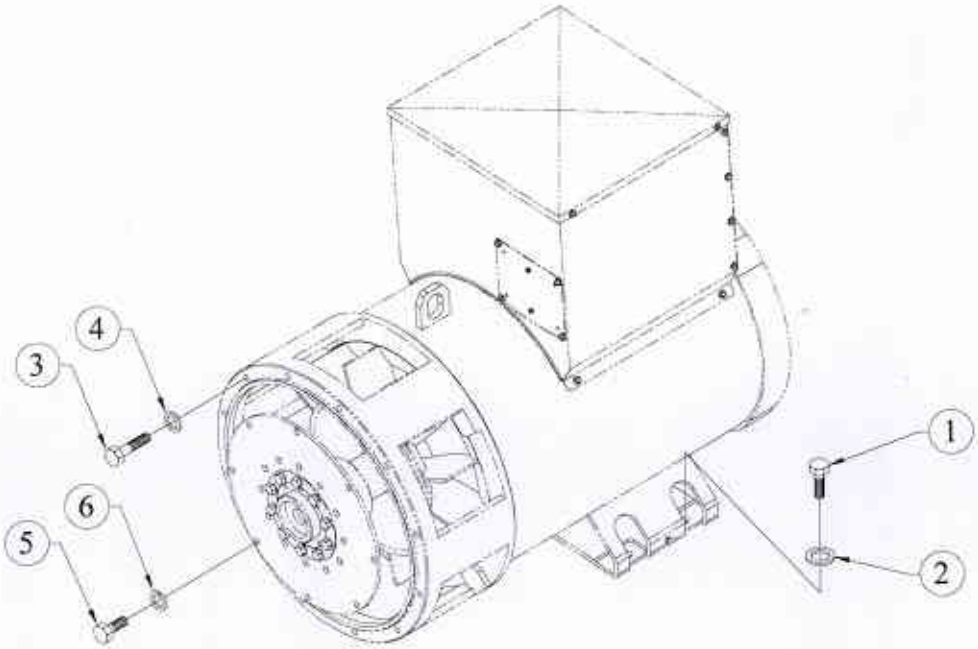

SR.NO.	PART NO.	DESCRIPTION	QTY.	REMARKS
1	50.003.12.040.	SET SCREW - M12X1.75X40 - 8.8	2	
2	02.430.03.0.00	WASHER (ID 13 X OD 30 X 5TH) FOR ALTERNATOR	2	
3	50.002.10.050.	SET BOLT - M10X1.5X50 - 8.8	12	
4	02.438.23.0.00	HARD WASHER (11 I.D. X 19 O.D. X 1.5 TH)	20	
5	50.003.10.025.	SET SCREW - M10X1.5X25 - 8.8	8	
6	50.505.10.000.	SPRING WASHER - M10	8	

TITLE: - RADIATOR ASSEMBLY-4K 125 KVA	**GROUP:** 4H.1005.30

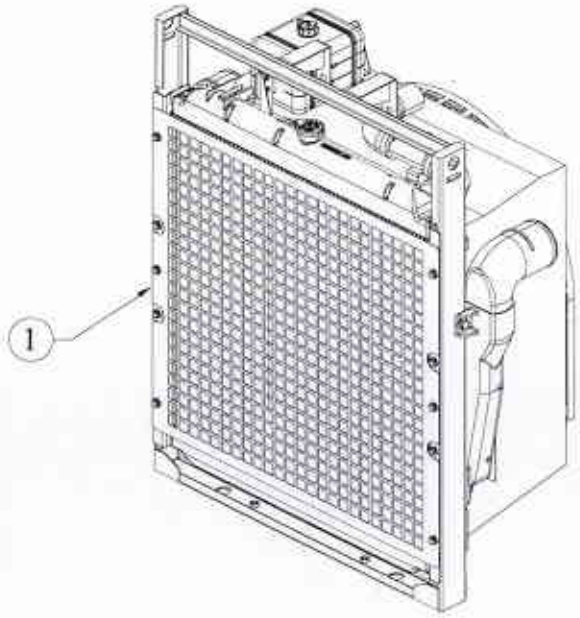

SR.NO.	PART NO.	DESCRIPTION	QTY.	REMARKS
1	4H.1005.30.0.PR	RADIATOR ASSEMBLY-4K 125 KVA	1	

TITLE: - KIT GROUP S/F CANOPY (4RTA - CPCB II)	GROUP: - 4H.104.4

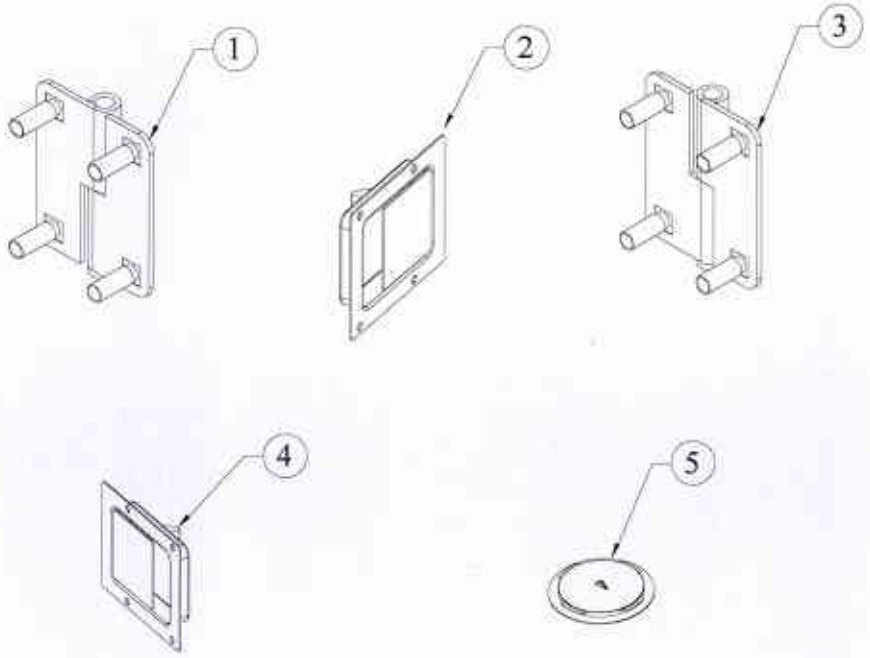

SR.NO.	PART NO.	DESCRIPTION	QTY.	REMARKS
1	3H.408.90.0.00	SS LEFT HAND HINGE FOR CANOPY	4	
2	6H.623.30.0.00	LEFT HAND LOCK WITH CATCHER FOR 50MM THK FOAM CANOPY	2	
3	3H.408.91.0.00	SS RIGHT HAND HINGE FOR CANOPY	4	
4	6H.623.25.0.00	RIGHT HAND LOCK WITH CATCHER FOR 50MM THK FOAM CANOPY	2	
5	3H.408.31.0.00	RAD WATER FILL CAP WITH RUBBER SEAL FOR CANOPY	1	
*6	D3.331.09.0.00	HANDLE FOR DOOR (DARSHNA PART NO.DHP110)	1	NOT ILLUSTRATED

TITLE: - COOLING SYSTEM	GROUP: - 4H.10PK.02

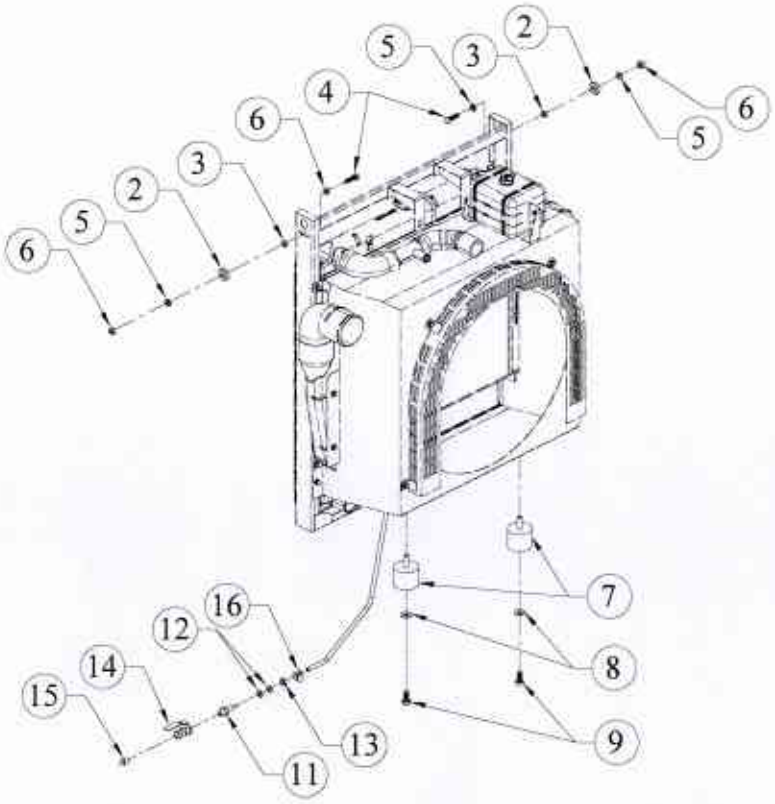

SR.NO.	PART NO.	DESCRIPTION	QTY.	REMARKS
*1	4H.10PM.40.0.00	RADIATOR AND MOUNTING SUB ASSEMBLY	1	CONSISTING OF SR.NO. 2 TO 9
2	6H.019.06.0.00	RUBBER BUSH	2	
3	6H.019.07.0.00	BUSH STEEL	2	
4	50.003.12.040.	SET SCREW - M12X1.75X40 - 8.8	2	
5	50.548.12.000.	SPL. PLAIN WASHER - M12	4	
6	50.006.12.000.	NUT - M12X1.75 - GR.8	2	
7	F6.509.04.0.00	ANTI VIBRATION MOUNTS	2	
8	50.548.10.000.	SPECIAL PLAIN WASHER - M10	2	
9	50.003.10.020.	SET SCREW - M10X1.5X20 - 8.8	2	
*10	4H.10PM.30.0.00	RADIATOR DRAIN ASSEMBLY	1	CONSISTING OF SR.NO. 11 TO 16
11	3H.153.02.0.00	ADAPTOR FOR DRAIN COCK (1/2" BSP MAIL)	1	
12	50.506.14.000.	PLAIN MACHINED WASHER - M14	2	
13	50.009.14.000.	LOCK NUT - M14X1.5 - GR.8	1	

TITLE: - COOLING SYSTEM	GROUP: - 4H.10PK.02

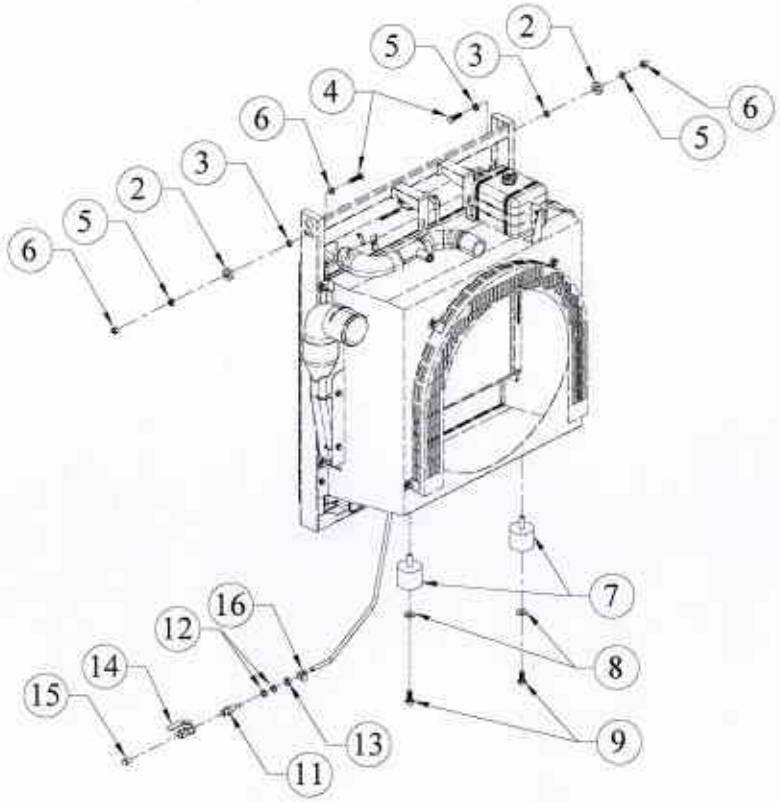

SR.NO.	PART NO.	DESCRIPTION	QTY.	REMARKS
14	3H.153.21.0.00	DRAIN COCK	1	
15	3H.153.08.0.00	PLUG (1/2" BSP) FOR DRAIN COCK	1	
16	2H.112.01.0.00	SPRING BAND CLIP (KLIPCO/ NOMINAL DIA. 10))	1	

TITLE: - COOLING SYSTEM	GROUP: - 4H.10PM.05

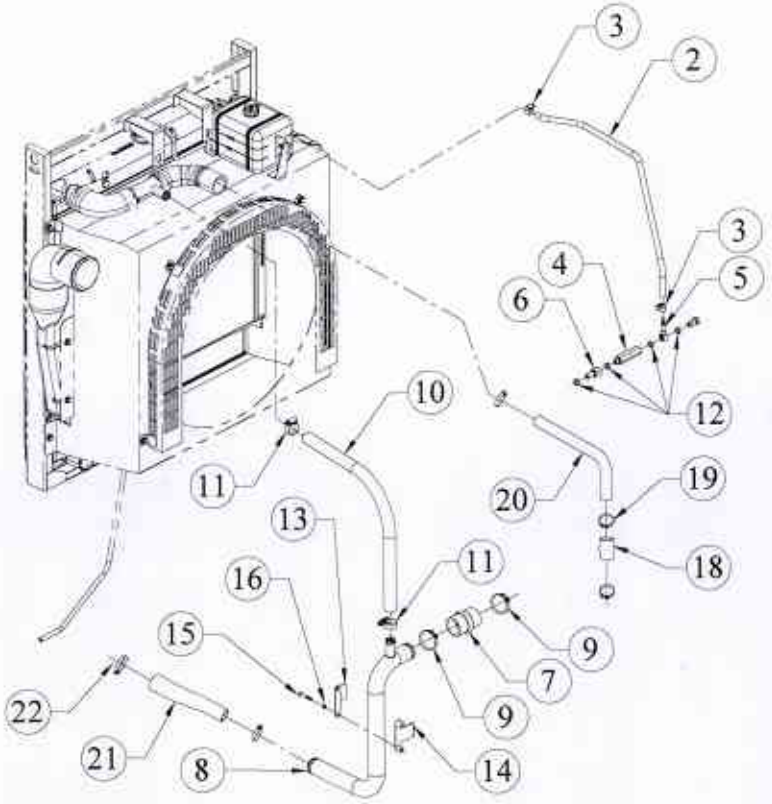

SR.NO.	PART NO.	DESCRIPTION	QTY.	REMARKS
*1	4H.10PM.50.0.00	WATER CONNECTION SUB ASSEMBLY	1	CONSISTING OF SR. NO. 2 TO 16
2	4H.1712.11.0.00	VENT PIPE FOR RADIATOR	1	
3	06.610.04.0.00	WIRE HOSE CLIP (S/F 16 MM PIPE)	2	
4	4H.225.13.0.00	SPACER FOR VENT CONNECTION	1	
5	06.610.10.0.00	HOSE TAIL CONNECTION (S/F M14 BANJO)	1	
6	4H.225.14.0.00	ADAPTOR FOR WATER TEMP. SWITCH	1	
7	4H.073.02.0.00	HOSE (PIPE TO WATER PUMP) (45X45X80L)	2	
8	4H.1718.02.0.00	PIPE RADIATOR TO WATER PUMP	1	
9	4H.1712.24.0.00	HOSE T-BOLT CLAMP (DIA. 55-65)	2	
10	4H.1712.31.0.PR	HOSE (RADIATOR TO WATER INLET PIPE)	1	
11	2H.112.02.0.00	WORM DRIVE CLAMP (JUPITOR JW7B13, 29 TO 45 DIA)	2	
12	50.508.12.000	COPPER WASHER (14X20)	4	

TITLE: - COOLING SYSTEM	GROUP: - 4H.10PM.05

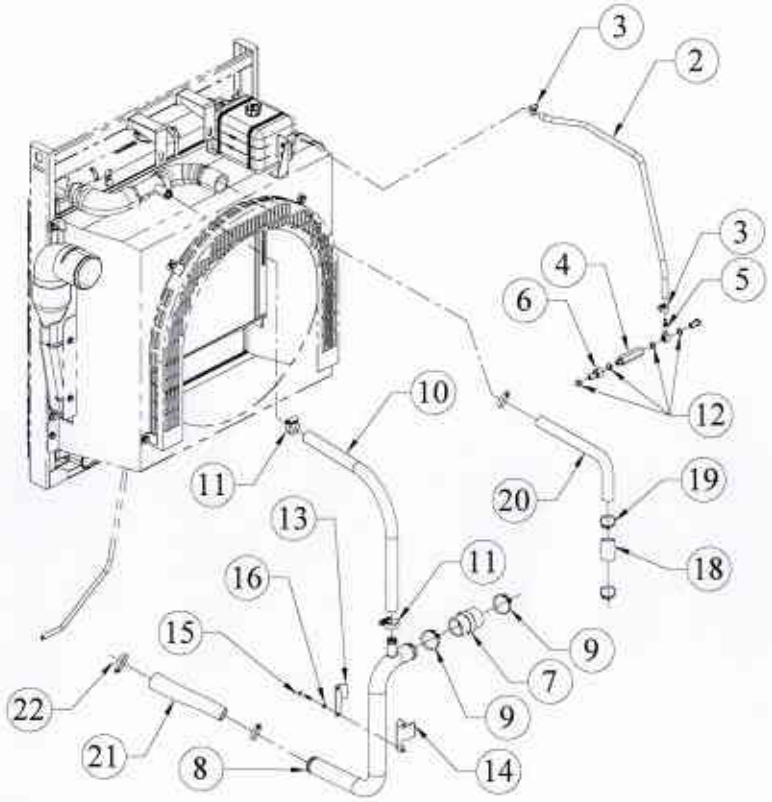

SR.NO.	PART NO.	DESCRIPTION	QTY.	REMARKS
13	4H.073.04.0.00	UPPER CLAMP FOR PIPE	1	
14	4H.1712.08.0.00	LOWER CLAMP	1	
15	50.002.08.045	SET BOLT - M8X1.25X45 - 8.8	2	
16	50.506.08.000	PLAIN MACHINED WASHER - M8	2	
*17	4H.1714.30.0.00	RADIATOR INLET PIPING & HOSES	1	CONSISTING OF SR. NO. 18 TO 22
18	4H.073.02.0.00	HOSE (PIPE TO WATER PUMP) (45X45X80L)	1	
19	4H.1712.24.0.00	HOSE T-BOLT CLAMP (DIA. 55-65)	4	
20	4H.1714.07.0.PR	PIPE (THERMOSTAT TO RADIATOR INLET)	1	
21	4H.1714.06.0.00	HOSE: RADIATOR TO WATER PUMP	1	
22	30.650.02.0.00	HOSE CLIP (S.S.70 DIA.)	1	

TITLE: - GEAR CASING (COMPACT-4K/6K)	GROUP: - 4H.1174.3

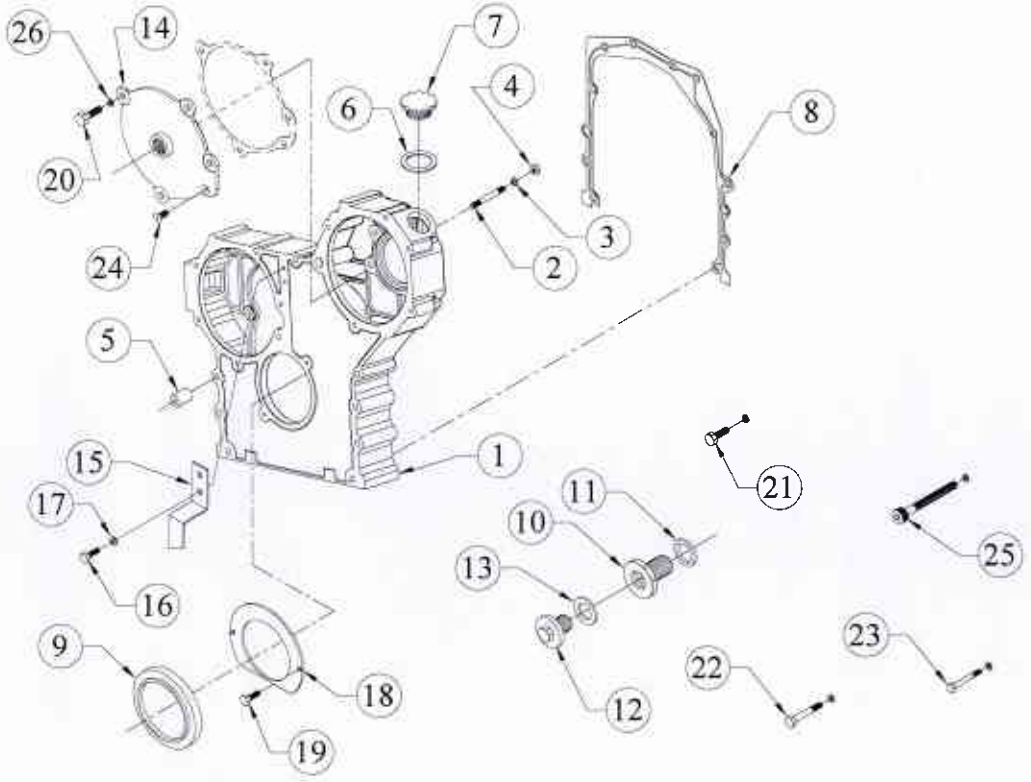

SR.NO.	PART NO.	DESCRIPTION	QTY.	REMARKS
1	4H.1174.11.0.00	GEAR CASING (FOR 4K/6K ENGINE)	1	
2	T4.119.13.0.00	PRECOATED STUD M8 (FOR FUEL PUMP MOUNTING)	3	
3	34.017.05.0.00	WASHER FOR FUEL PUMP GEAR.	3	
4	50.006.08.000.	NUT- M8X1.25 - GR.8	3	
5	34.001.23.0.00	DOWEL FOR GEAR CASING	2	
6	F6.040.01.0.00	SEALING WASHER (FOR OIL FILLING CAP)	1	
7	F6.040.04.0.00	OIL FILLER CAP	1	
8	6H.020.04.0.00	JOINT BETWEEN CRANKCASE AND GEAR CASING	1	
9	4H.358.06.0.00	GEAR END OIL SEAL (80X105X12)	1	
10	03.117.04.0.00	ADAPTOR (FOR TACHODRIVE)	1	
11	50.508.27.000.	COPPER WASHER (24X29)	1	
12	34.001.36.0.00	PRECOATED CORE PLUG (FOR MAIN OIL GALLERY FWE SIDE)	1	
13	50.508.17.000.	COPPER WASHER (18X24)	1	

TITLE: - GEAR CASING (COMPACT-4K/6K)	**GROUP: -** 4H.1174.3

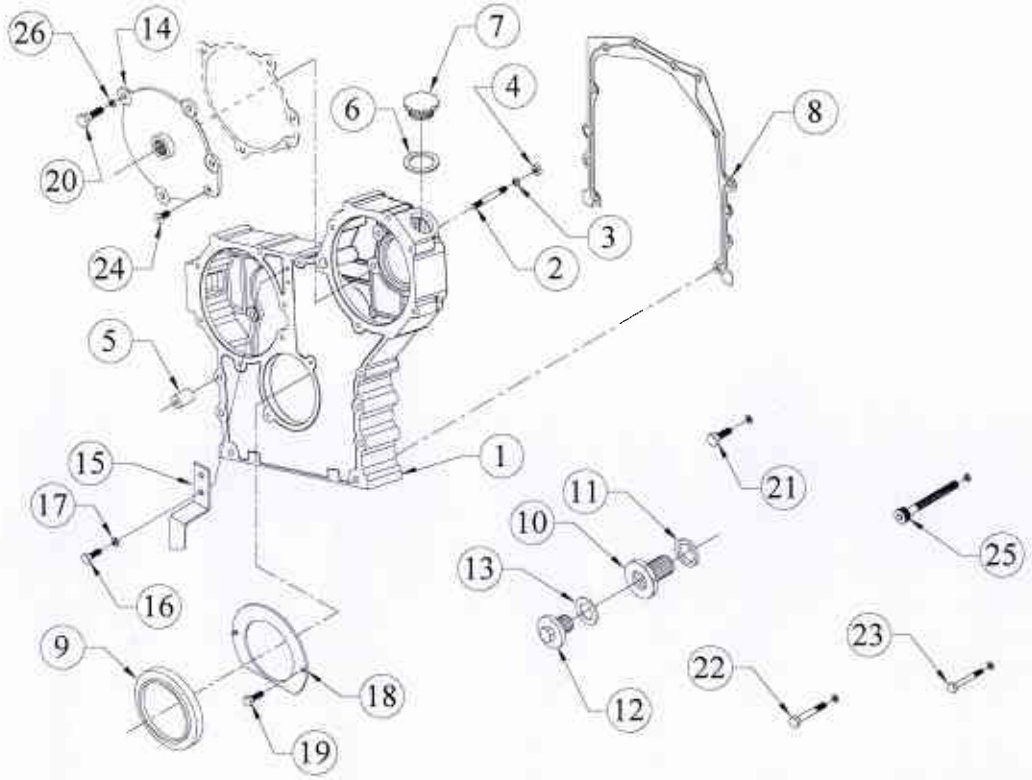

SR.NO.	PART NO.	DESCRIPTION	QTY.	REMARKS
14	4H.1235.02.0.00	COVER FOR CAM SHAFT BORE ON GEAR CASING	1	
15	4H.1235.07.0.00	TIMING POINTER PG	1	
16	50.003.06.012.	SET SCREW - M6X1X12 - 8.8	2	
17	50.506.06.000.	PLAIN MACHINED WASHER - M6	4	
18	4H.358.12.0.00	OIL DEFLECTOR PLATE	1	
19	50.003.06.010.	SET SCREW - M6X1X10 - 8.8	2	
20	50.003.08.016.	SET SCREW - M8X1.25X16 - 8.8	3	
21	50.003.08.025.	SET SCREW - M8X1.25X25 - 8.8	4	
22	50.002.08.080.	SET BOLT - M8X1.25X80 - 8.8	5	
23	50.002.08.085.	SET BOLT - M8X1.25X85 - 8.8	3	
24	06.010.01.0.00	COUNTER SUNK SOCKET HEAD SCREW.	1	
25	50.011.08.070.	SOCKET HEAD SCREW - M8X1.25X70 - 8.8	1	
26	50.506.08.000.	PLAIN MACHINED WASHER - M8	16	

TITLE: - EXHAUST SYSTEM	**GROUP: -** 4H.11PK.02

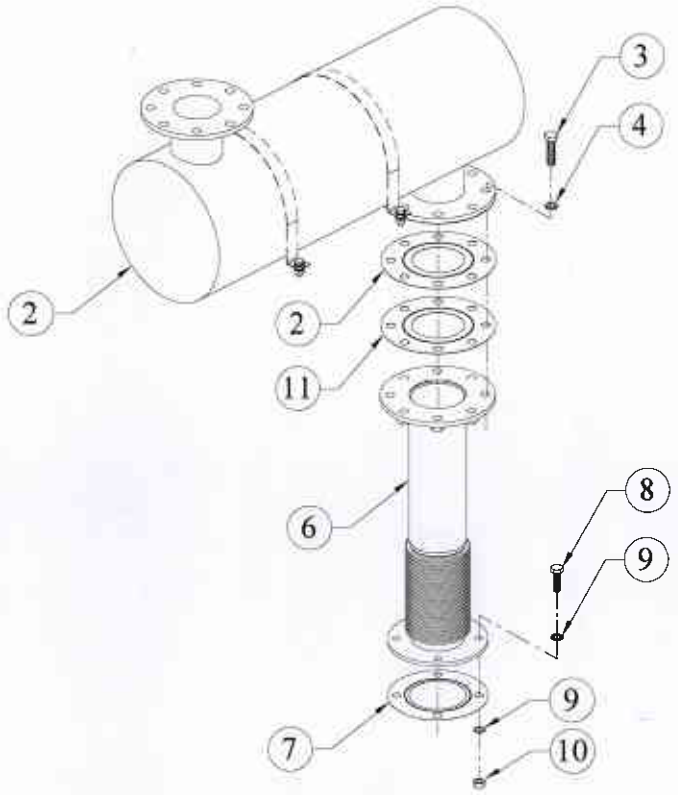

SR.NO.	PART NO.	DESCRIPTION	QTY.	REMARKS
*1	4H.11PM.40.0.00	EXHAUST SILENCER ASSEMBLY	1	CONSISTING OF SR. NO. 2 TO 4
2	6H.352.02.0.00	JOINT FOR EXHAUST SILENCER	2	
3	50.003.16.060.	SET SCREW	8	
4	50.506.16.000.	PLAIN MACHINED WASHER - M16	8	
*5	4H.11PM.50.0.00	EXPANSION BELLOW ASSEMBLY	1	CONSISTING OF SR. NO. 7 TO 12
6	4H.1715.04.0.PR	EXPANSION BELLOW	1	
7	F6.503.02.0.00	S.S.JOINT(4")	1	
8	50.003.14.045.	SET SCREW - M14X2X45 - 8.8	4	
9	50.506.14.000.	PLAIN MACHINED WASHER - M14	8	
10	50.006.14.000.	NUT - M14X2 - GR.8.8	4	
11	6H.352.02.0.00	JOINT FOR EXHAUST SILENCER	1	

TITLE: - FIP GEAR COVER AND FEED PUMP ASSEMBLY	**GROUP: -** 4H.1284

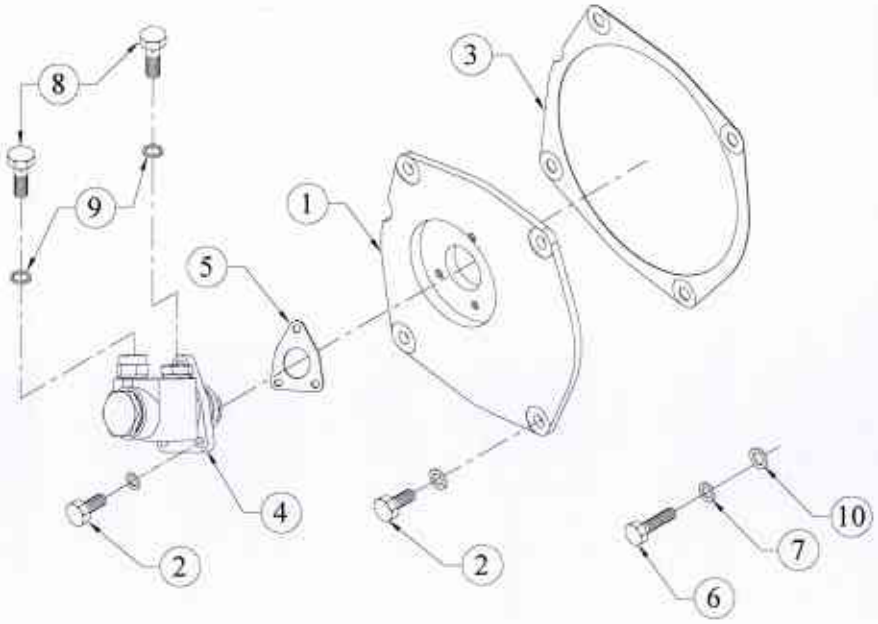

SR.NO.	PART NO.	DESCRIPTION	QTY.	REMARKS
1	4H.1284.05.0.00	COVER FOR FRONT COVER	1	
2	50.003.08.020.	SET SCREW - M8X1.25X20 - 8.8	4	
3	4H.1190.03.0.00	JOINT FOR FUEL PUMP GRAR COVER	1	
4	4H.2579.03.0.00	FUEL FEED PUMP FOR CMVR STAGE-III	1	
5	08.021.02.0.00	JOINT FOR FEED PUMP	1	
6	50.003.06.016.	SET SCREW - M6X1X16 - 8.8	3	
7	50.506.06.000.	PLAIN MACHINED WASHER - M6	3	
8	50.504.04.000.	BANJO BOLT - M14X1.5	2	
9	50.508.11.000.	COPPER WASHER (14X18)	4	
10	50.506.08.000.	PLAIN MACHINED WASHER - M8	4	

TITLE: - FIP GEAR WITH FACIAL CAM	**GROUP: -** 4H.1284.1

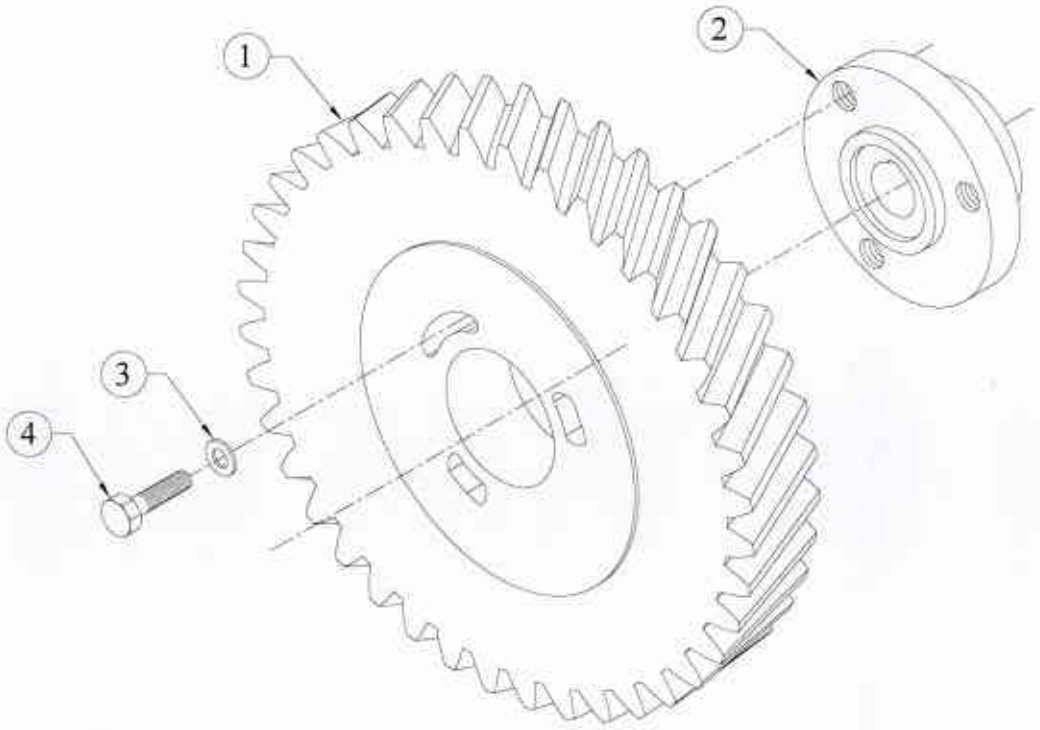

SR.NO.	PART NO.	DESCRIPTION	QTY.	REMARKS
1	4H.1284.09.0.00	FUEL PUMP GEAR	1	
2	4H.1284.11.0.00	HUB FOR FUEL PUMP GEAR (FACIAL CAM)	1	
3	50.003.08.025.	SET SCREW - M8X1.25X25 - 8.8	3	
4	34.017.05.0.00	WASHER FOR FUEL PUMP GEAR.	3	

TITLE: - AVM ASSEMBLY	**GROUP: -** 4H.12PM.02

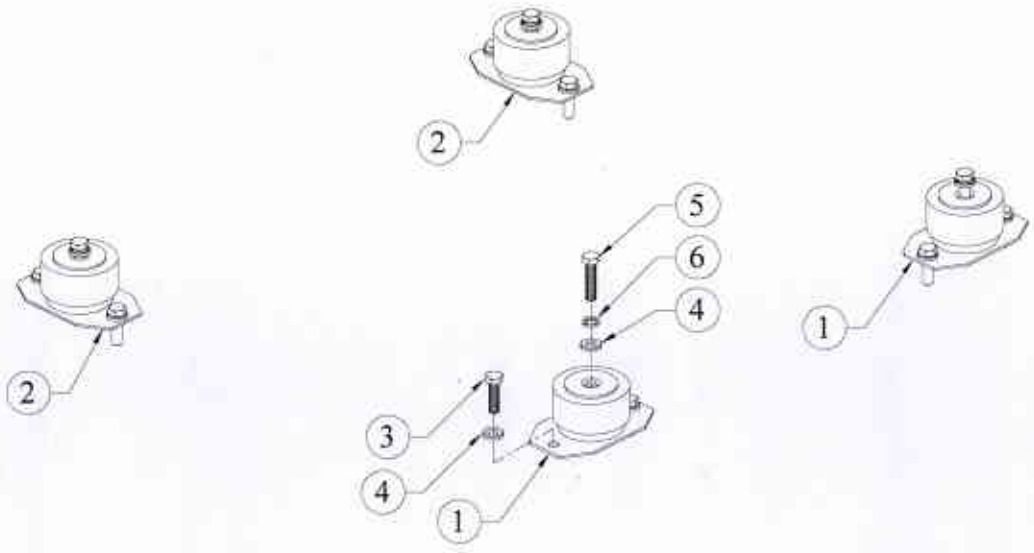

SR.NO.	PART NO.	DESCRIPTION	QTY.	REMARKS
1	2H.332.02.0.00	ANTIVIBRATION MOUNTING (PGS-1C POLYBOND MAKE) FOR 2R/3R1040	2	
2	2H.332.01.0.00	ANTIVIBRATION MOUNTING (PGS-1B POLYBOND MAKE) FOR 2R/3R1040	2	
3	50.003.12.040.	SET SCREW - M12X1.75X40 - 8.8	8	
4	50.548.12.000.	SPL. PLAIN WASHER - M12	12	
5	50.003.12.050.	SET SCREW - M12X1.75X50 - 8.8	4	
6	50.505.12.000.	SPRING WASHER - M12	4	

TITLE: - CRANKCASE (MONOBLOCK) (4K 1080-4 VALVE-125 KVA)	GROUP: - 4H.1301.2

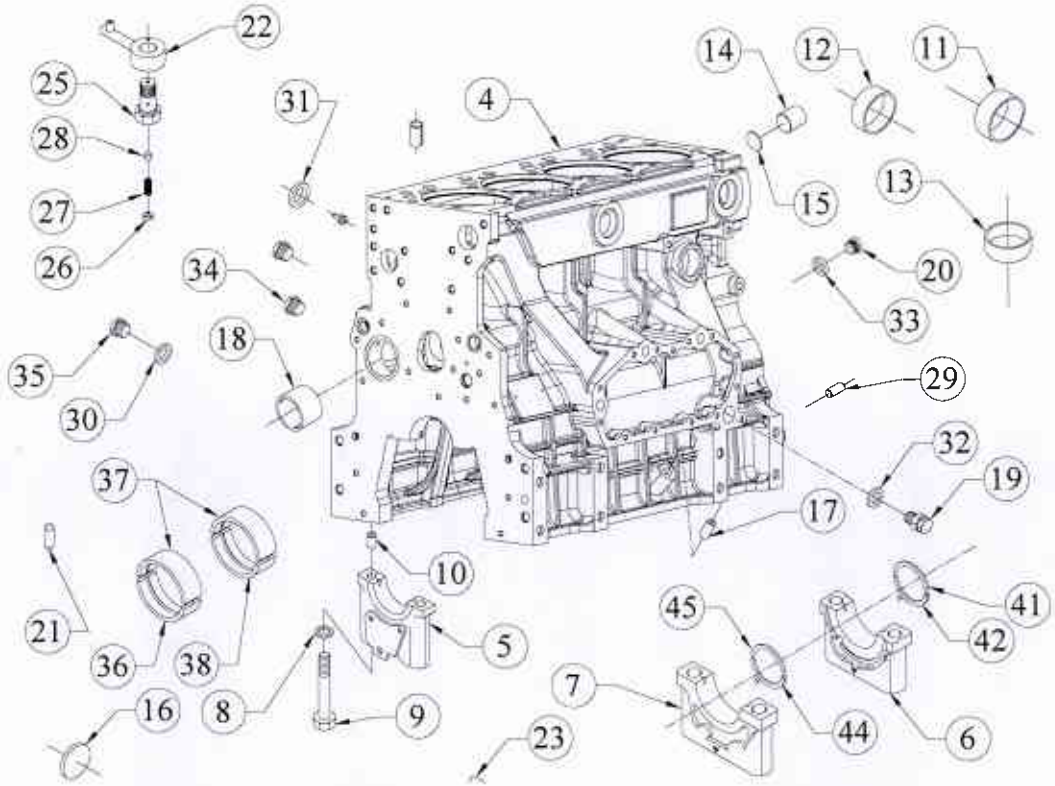

SR.NO.	PART NO.	DESCRIPTION	QTY.	REMARKS
*1	4H.1301.50.0.PR	CRANKCASE (MONOBLOCK) WITHOUT BEARINGS	1	CONSISTING OF SR. NO. 2 & 36 TO 39
*2	4H.1301.60.0.PR	CRANKCASE (MONOBLOCK) WITH SEALING CAP	1	CONSISTING OF SR. NO. 3 & 16 TO 24
*3	4H.1301.70.0.PR	CRANKCASE ASSLY WITH MB CAP (4K1080 4V)	1	CONSISTING OF SR. NO. 4 TO 15
4	4H.1301.03.0.00	MONOBLOCK CRANKCASE (SUITABLE FOR 4 VALVE DESIGN)	1	NOT SUPPLIED LOOSE
5	6H.001.07.0.00	MAIN BEARING CAP (FINISH) G.E.	1	NOT SUPPLIED LOOSE
6	4H.1301.02.0.00	MAIN BEARING CAP FWE	1	NOT SUPPLIED LOOSE
7	6H.001.08.0.00	MAIN BEARING CAP	3	NOT SUPPLIED LOOSE
8	02.001.04.0.00	SPECIAL WASHER FOR M14 BOLT	10	
9	03.001.22.0.00	BOLT FOR MB CAP(HEX HEAD) M14X2X128	10	

TITLE: - CRANKCASE (MONOBLOCK) (4K 1080-4 VALVE-125 KVA)	GROUP: - 4H.1301.2

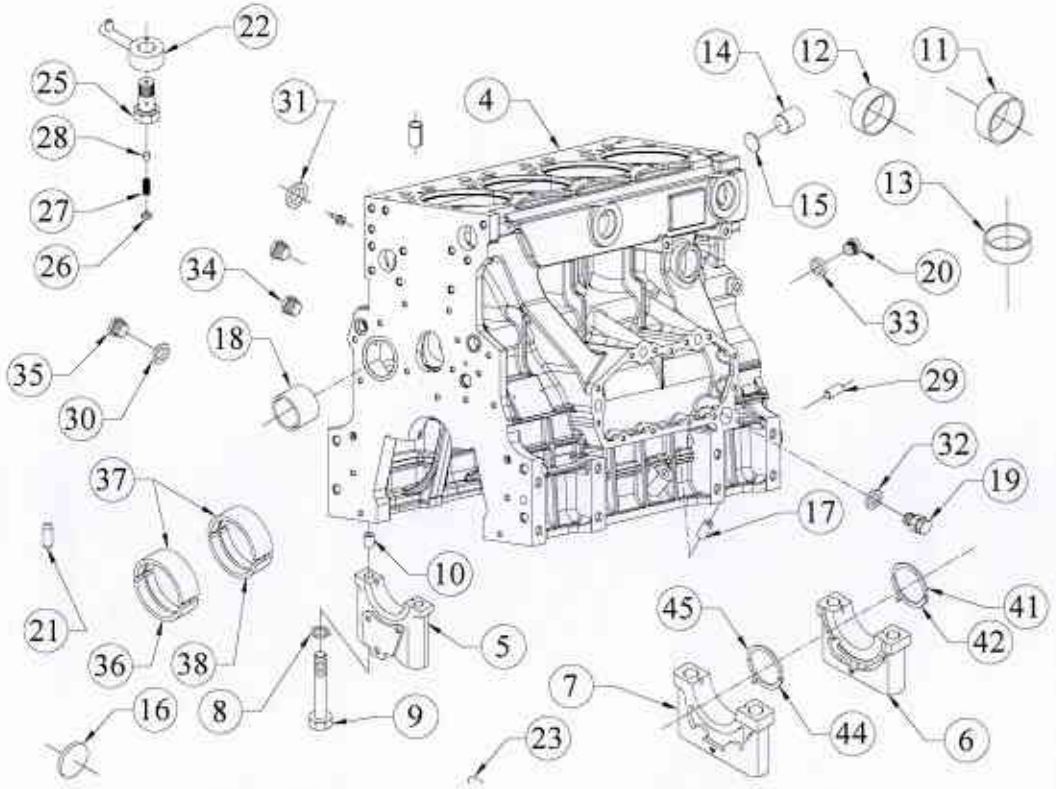

SR.NO.	PART NO.	DESCRIPTION	QTY.	REMARKS
10	B2.005.16.0.00	HOLLOW DOWEL(M.B.CAP)	10	
11	F6.007.34.0.00	SEALING CAP	5	
12	F6.001.58.0.00	SEALING CAP.(40 DIN 443)	3	
13	4H.001.05.0.00	SEALING CAP	3	
14	34.003.07.0.00	CRANK SHAFT PLUG - ALUMINIUM	2	
15	34.003.08.0.00	WASHER FOR ALU.PLUG.	2	
16	02.001.13.0.00	DISC PLUG	1	
17	02.037.04.0.00	DIPSTICK GUIDE	1	
18	03.001.04.0.00	CAM BUSH	1	
19	03.001.06.0.00	SCREW PLUG	2	
20	04.001.08.0.00	PRECOATED SCREW PLUG	2	
21	4H.1301.04.0.00	OIL METERING ORIFICE	1	
22	4H.1301.90.0.00	PISTON COOLING NOZZLE ASSEMBLY	4	
23	50.401.04.012.	DOWEL PINS	4	
*24	4H.156.07.0.00	SUB. ASSEMBLY OF SPECIAL BANJO BOLT (FOR OIL SPRAY NOZZLE.)	4	CONSISTING OF SR. NO. 25 TO 28

TITLE: - CRANKCASE (MONOBLOCK) (4K 1080-4 VALVE-125 KVA)	GROUP: - 4H.1301.2

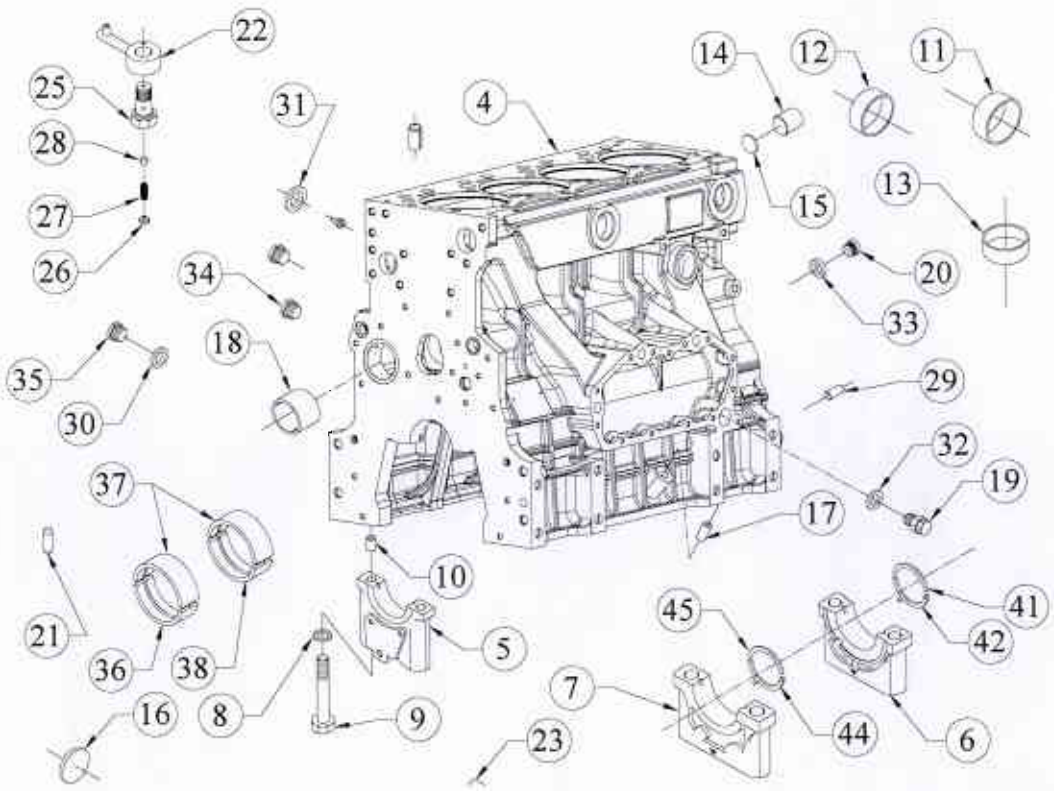

SR.NO.	PART NO.	DESCRIPTION	QTY.	REMARKS
25	4H.156.05.0.00	BANJO BOLT	1	
26	4H.156.06.0.00	CLOSING BUTTON (FOR OIL SPRAY BANJO BOLT)	1	
27	02.002.02.0.00	SPRING	1	
28	02.002.04.0.00	STEEL BALL	1	
29	50.401.08.014.	DOWEL	2	
30	50.508.11.000.	COPPER WASHER (14X18)	4	
31	50.508.12.000.	COPPER WASHER (14X20)	1	
32	50.508.14.000.	COPPER WASHER (16X22)	2	
33	50.508.18.000.	COPPER WASHER (20X24)	2	
34	50.610.12.000.	CORE PLUG	1	
35	50.610.14.000.	CORE PLUG-HEXAGONAL SOCKET HEAD(DIN-908)	4	
36	6H.426.04.0.00	MAIN BEARING BOTTOM (GE)	1	NOT SUPPLIED LOOSE
37	6H.426.02.0.00	MAIN BEARING (TOP)	5	NOT SUPPLIED LOOSE
38	6H.426.03.0.00	MAIN BEARING (BOTTOM)	4	NOT SUPPLIED LOOSE

TITLE: - CRANKCASE (MONOBLOCK) (4K 1080-4 VALVE-125 KVA)	GROUP: - 4H.1301.2

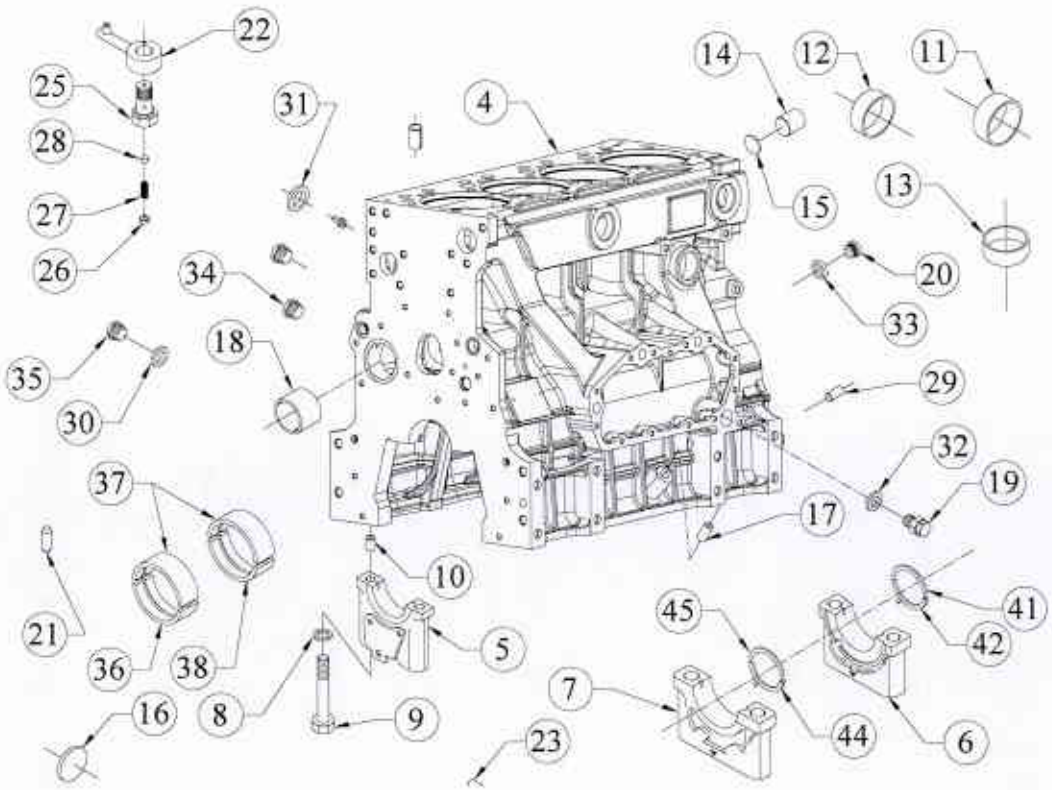

SR.NO.	PART NO.	DESCRIPTION	QTY.	REMARKS
*39	6H.001.05.0.00	THRUST WASHER SET OF INNER & OUTER PAIRS	1	CONSISTING OF SR. NO. 40,43
*40	6H.001.03.0.00	THRUST WASHER PAIR(INNER)	1	CONSISTING OF SR. NO. 41,42
41	6H.001.09.0.00	THRUST WASHER (INNER) TOP SIDE	1	
42	6H.001.11.0.00	THRUST WASHER (INNER) BOTTOM SIDE	1	
*43	6H.001.04.0.00	THRUST WASHER PAIR (OUTER)	1	CONSISTING OF SR. NO. 44,45
44	6H.001.13.0.00	THRUST WASHER (OUTER) BOTTOM SIDE	1	
45	6H.001.12.0.00	THRUST WASHER (OUTER) TOP SIDE	1	

TITLE: - CRANK SHAFT (4K 1080 TA)	GROUP: - 4H.1302

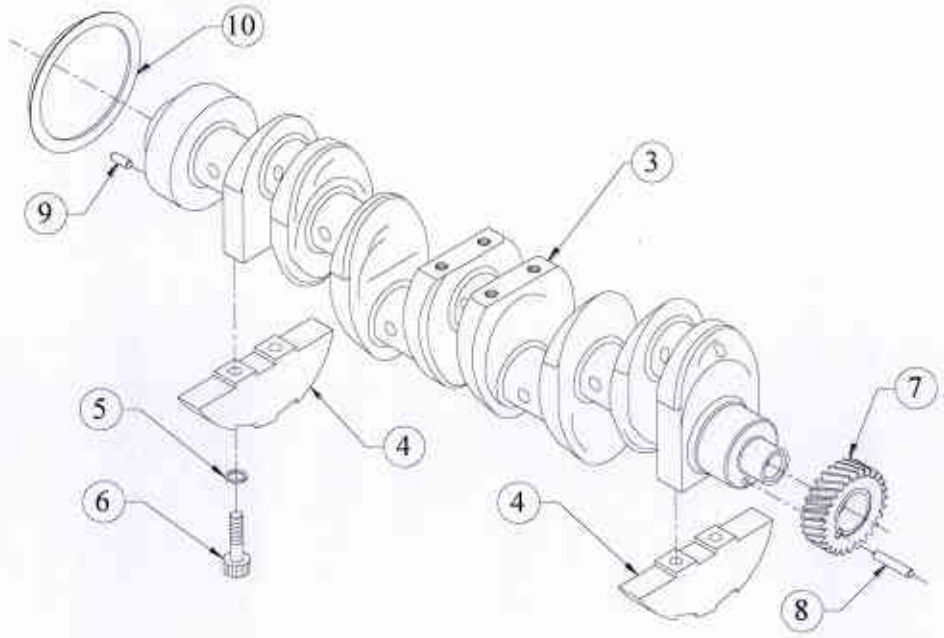

SR.NO.	PART NO.	DESCRIPTION	QTY.	REMARKS
*1	4H.1302.10.0.00	CARNKSHAFT ASSEMBLY WITH GEAR	1	CONSISTING OF SR. NO. 2, 7 TO 10
*2	4H.1302.20.0.00	CRANKSHAFT ASSEMBLY	1	CONSISTING OF SR. NO. 3 TO 6
3	4H.1302.01.0.00	CRANK SHAFT FINISH (4K 1080 TA)	1	NOT SUPPLIED LOOSE
4	6H.387.02.0.00	BALANCE WEIGHT	4	NOT SUPPLIED LOOSE
5	02.005.04.0.00	HARD WASHER (13 I.D X 21O.D X 1.5 TH)	8	
6	04.005.12.0.00	SOCKET HEAD BOLT - M12X1.75X60 -10.9	8	
7	4H.002.01.0.00	CRANK SHAFT GEAR (FINISH/)	1	
8	50.401.08.060.	DOWEL PIN 8X60	1	
9	50.401.08.025.	DOWEL PIN 8X25	1	
10	P2.020.09.0.00	DEFLECTOR FOR OIL SEAL	1	NOT SUPPLIED LOOSE

TITLE: - SUCTION TUBE (4K ENGINE) FOR SHEET METAL SUMP	**GROUP: -** 4H.1385.1

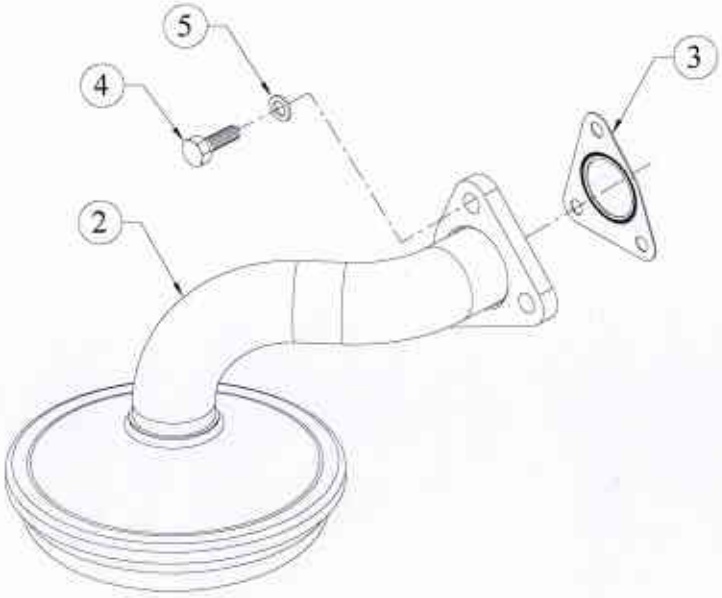

SR.NO.	PART NO.	DESCRIPTION	QTY.	REMARKS
*1	4H.1385.40.0.00	SUCTION TUBE ASSEMBLY (WITH FUNNEL AND STRAINER BASKET)	1	CONSISTING OF SR. NO. 2
2	4H.1385.30.0.00	SUCTION TUBE ASSY (MOUNTING)	1	
3	6H.986.05.0.00	JOINT FOR SUCTION FLANGE	1	
4	50.003.08.025.	SET SCREW - M8X1.25X25 - 8.8	3	
5	50.506.08.000.	PLAIN MACHINED WASHER - M8	3	

TITLE: - LUB OIL SUMP (4K ENGINE) (SHEET METAL)	GROUP: - 4H.1386.2

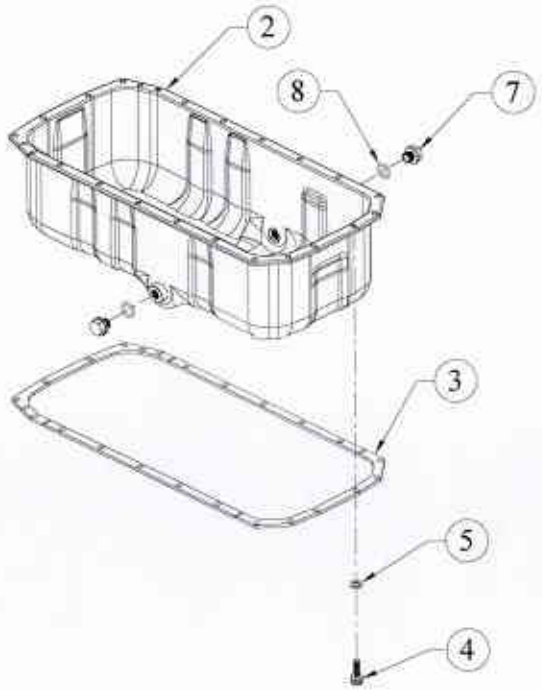

SR.NO.	PART NO.	DESCRIPTION	QTY.	REMARKS
*1	4H.1386.10.0.00	LUB. OIL SUMP ASSEMBLY	1	CONSISTING OF SR. NO. 2, 3
2	4H.1386.02.0.00	LUB OIL SUMP (SHEET METAL) FOR 4K1080	1	
3	4H.1386.03.0.00	REINFORCEMENT PLATES (FOR SHEET METAL SUMP)	1	
4	50.011.08.020.	SOCKET HEAD SCREW - M8X1.25X20 - 8.8	22	
5	06.074.16.0.00	WASHER(SHEET METAL L.O.SUMP)	22	
*6	2H.035.20.0.00	PLUG WITH MAGNET & 'O'RING.	2	CONSISTING OF SR. NO. 7 & 8
7	2H.035.10.0.00	DRAIN PLUG ASSEMBLY.	1	
8	F6.024.47.0.00	O - RING FOR DRAIN PLUG	1	

TITLE: - CAMSHAFT (4K1080 4V ENGINE)	GROUP: - 4H.1387.3

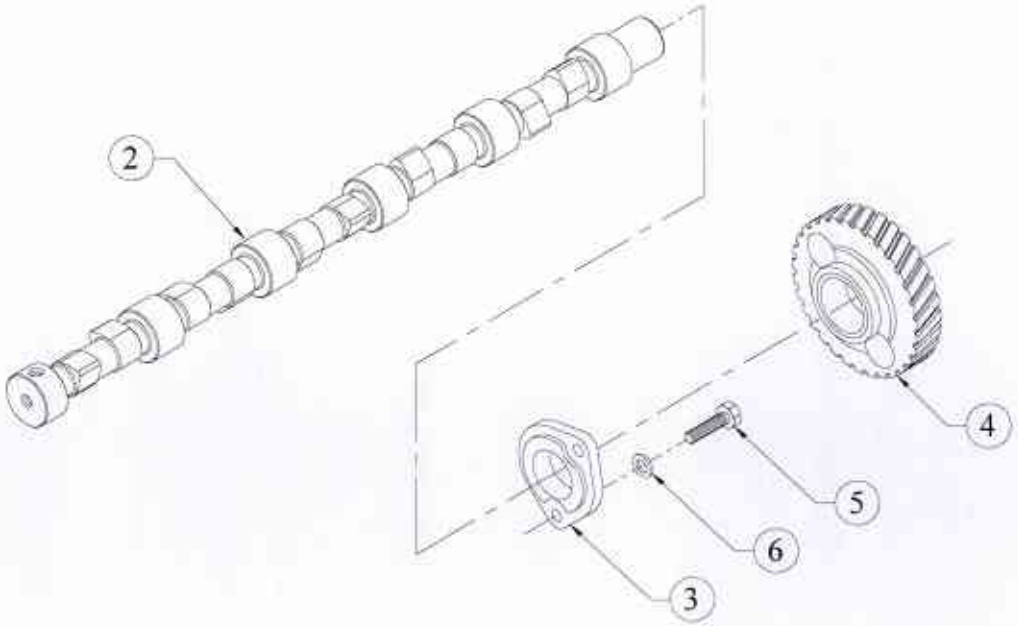

SR.NO.	PART NO.	DESCRIPTION	QTY.	REMARKS
*1	4H.1387.30.0.PR	CAMSHAFT ASSY (4K ENGINE)	1	CONSISTING OF SR.NO. - 2 TO 6
2	4H.1387.03.0.PR	CAMSHAFT (4K1080 4V ENGINE)	1	NOT SUPPLIED LOOSE
3	6H.226.03.0.00	THRUST PLATE	1	NOT SUPPLIED LOOSE
4	6H.226.02.0.00	CAM GEAR	1	NOT SUPPLIED LOOSE
5	50.003.08.020.	SET SCREW - M8X1.25X20 - 8.8	2	
6	50.506.08.000.	PLAIN MACHINED WASHER - M8	2	

TITLE: - DIPSTICK (4K-SHEET METAL SUMP)	GROUP: - 4H.1388.2

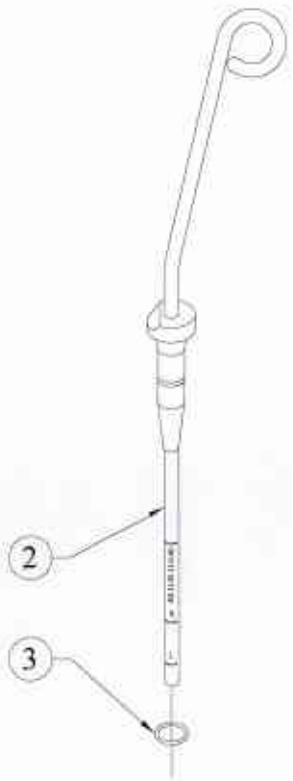

SR.NO.	PART NO.	DESCRIPTION	QTY.	REMARKS
*1	4H.1388.60.0.00	DIPSTICK ASSEMBLY WITH 'O' RING	1	CONSISTING OF SR. NO. 2,3
2	4H.1388.50.0.00	DIPSTICK ASSEMBLY	1	
3	03.036.01.0.00	O RING - DIPSTICK (2X5,21515 OR 21511)	1	

TITLE: - BREATHER HOSE	**GROUP: -** 4H.13PM.02

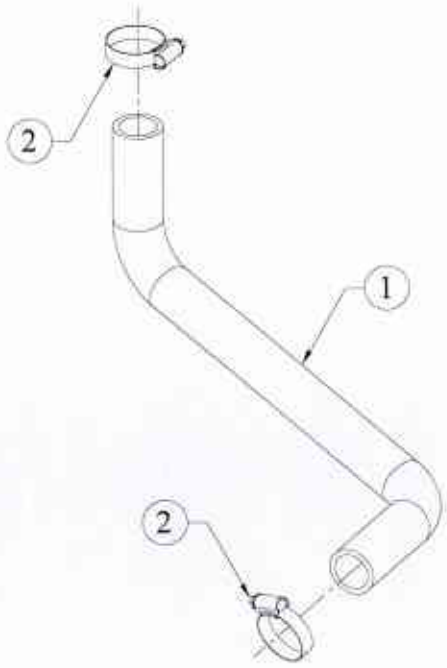

SR.NO.	PART NO.	DESCRIPTION	QTY.	REMARKS
1	4H.1718.08.0.PR	BREATHER HOSE	1	
2	50.519.09.000.	HOSE CLIP (48 MM) For 39.464.02.0.00	2	

TITLE: - TURBOCHARGER (4K1080 4V, CPCB II)	GROUP: - 4H.1437.4

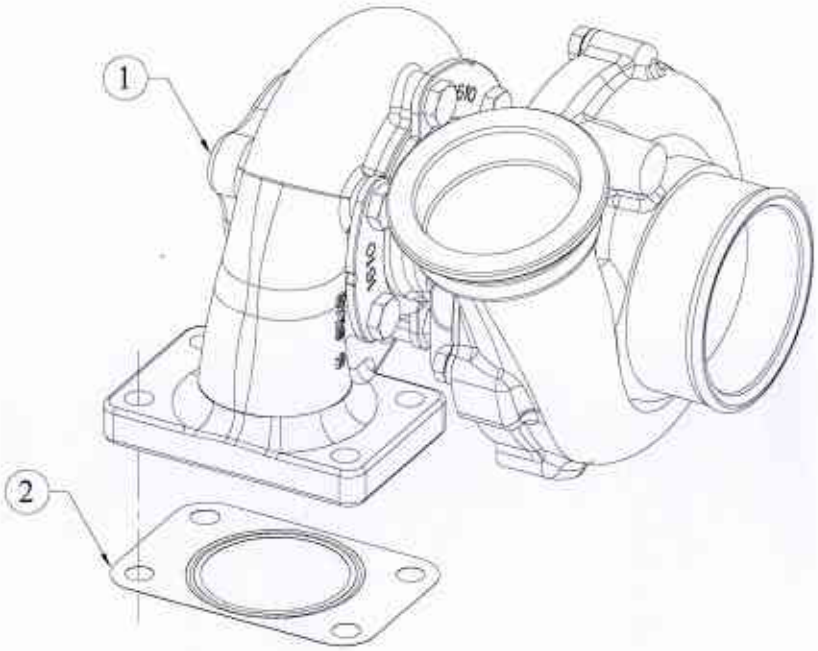

SR.NO.	PART NO.	DESCRIPTION	QTY.	REMARKS
1	4H.1437.06.0.00	Turbocharger for 4K1080 TA 4V CPCB-II Engine.	1	
2	4H.1437.01.0.00	JOINT (FOR TURBO)	1	

TITLE: - TURBOCHARGER OIL PIPING	**GROUP: -** 4H.1437.5

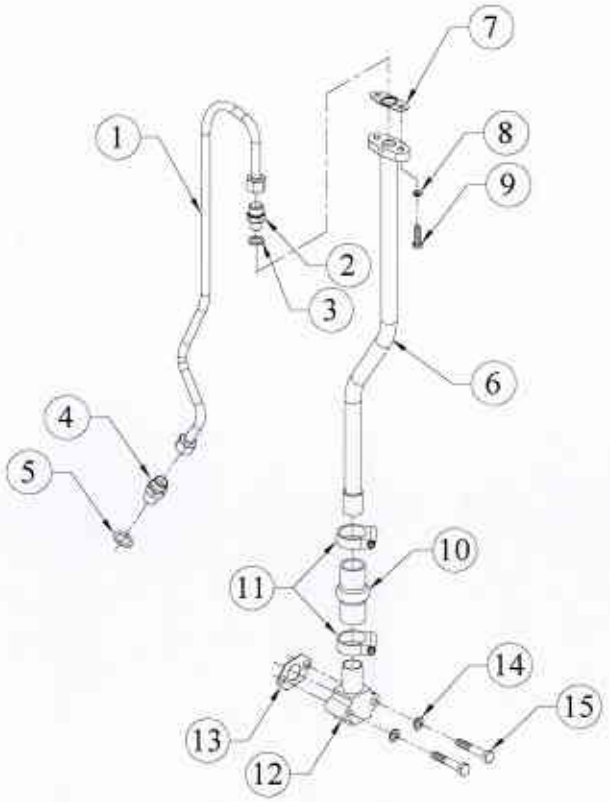

SR.NO.	PART NO.	DESCRIPTION	QTY.	REMARKS
1	4H.1437.70.0.PR	TURBO LUB OIL SUPPLY PIPE (FOR TURBOCHARGER)	1	
2	4H.1437.04.0.00	ADAPTOR (TURBOCHARGER)	1	
3	50.508.10.000.	COPPER WASHER (12X18)	1	
4	6H.034.03.0.00	ADAPTOR FOR OIL PIPE	1	
5	50.508.14.000.	COPPER WASHER (16X22)	1	
6	4H.1437.80.0.PR	LUB OIL DRAIN PIPE (ASSLY)	1	
7	4H.1437.02.0.00	JOINT FOR ADAPTOR	1	
8	50.506.06.000.	PLAIN MACHINED WASHER - M6	2	
9	50.003.06.020.	SET SCREW - M6X1X20 - 8.8	2	
10	4H.366.07.0.00	HOSE STRAIGHT 70 MM LENGTH WITH CENTRAL HUMP	1	
11	50.519.06.000.	HOSE CLIP (30 MM) For 48.019.02.0.00, 40.149.02.0.00	2	
12	4H.132.13.0.00	ADAPTOR ASSEMBLY FOR TURBO DRAIN (CRANKCASE SIDE)	1	
13	4H.132.31.0.00	JOINT FOR ADAPTOR CRANKCASE SIDE	1	

TITLE: - TURBOCHARGER OIL PIPING	GROUP: - 4H.1437.5

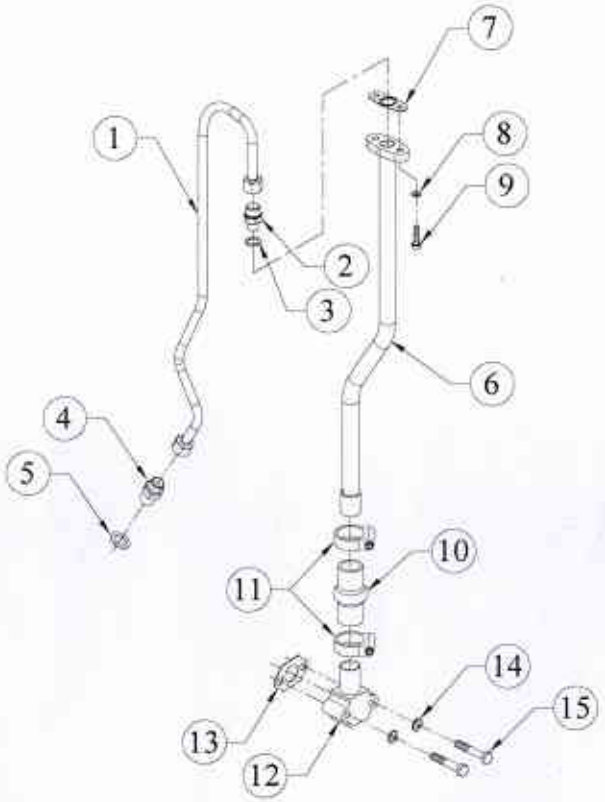

SR.NO.	PART NO.	DESCRIPTION	QTY.	REMARKS
14	50.506.08.000.	PLAIN MACHINED WASHER – M8	2	
15	50.002.08.045.	SET BOLT – M8X1.25X45 – 8.8	2	

TITLE: - INJECTOR ASSEMBLY (4K1080 4V)	**GROUP: -** 4H.1454

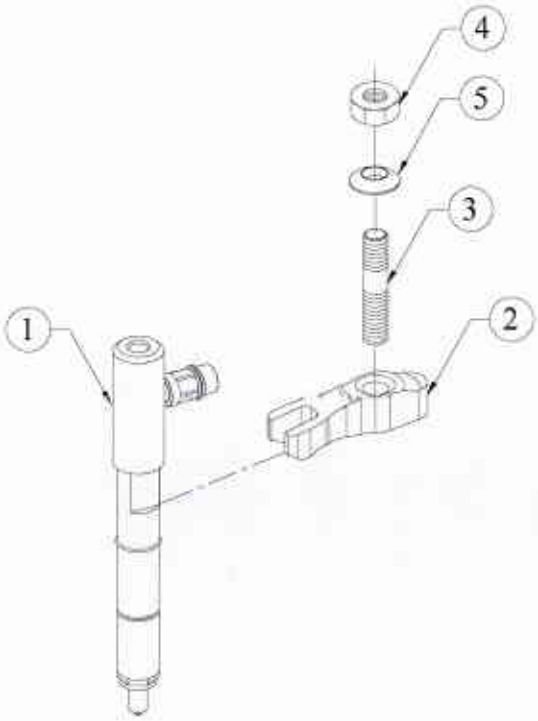

SR.NO.	PART NO.	DESCRIPTION	QTY.	REMARKS
1	4H.1454.07.0.00	INJECTOR - NHA E 080 2246 00 WITH NOZZLE B 433 391 729 (SPRAY CONE ANGLE 146? & HTF 1000cc/30sec@100bar)	1	
2	4H.1626.05.0.PR	NOZZLE CLAMP (BAR ROUT)	1	
3	4H.1454.13.0.00	SPECIAL STUD FOR INJECTOR ASSEMBLY (4K1080 4V)	1	
4	4H.1454.14.0.00	NUT FOR INJECTOR STUD (4K1080 4V)	1	
5	4H.1626.03.0.PR	SPHERICAL WASHER	1	

TITLE: - ALTERNATOR MOUNTING WITH POLY V BELT 6PK	GROUP: - 4H.1481.6

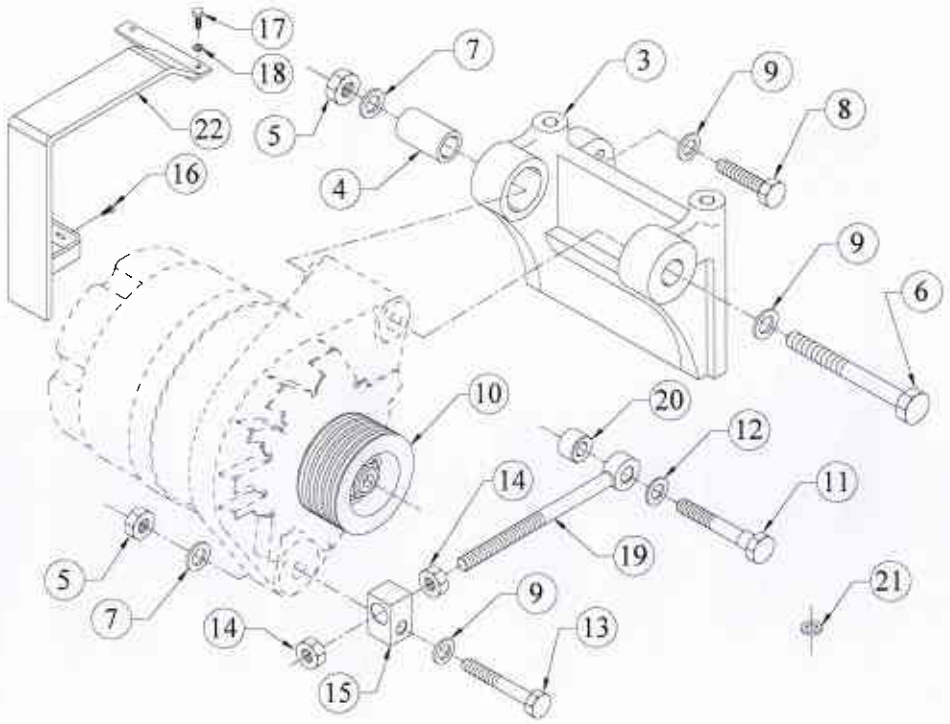

SR.NO.	PART NO.	DESCRIPTION	QTY.	REMARKS
*1	4H.1484.10.0.00	ALTERNATOR MOUNTING KIT FOR POLY V BELT	1	CONSIST. OF SR. NO. 2 & 8 TO 22
*2	4H.044.20.0.00	MOUNTING SUBASLY. FOR ALTERNATOR	1	CONSIST. OF SR. NO. 3 TO 7
3	48.175.07.0.00	BKT.FOR ALT	1	
4	48.067.04.0.00	BUSH FOR ALTERNATOR (IN BRACKET) 32MM	1	
5	50.006.10.000.	NUT - M10X1.5 - GR.8.8	1	
6	48.067.03.7.00	DOWEL BOLT FOR ALTERNATOR M10X1.5 (130MM)	1	
7	50.506.10.000.	PLAIN MACHINED WASHER - M10	2	
8	50.003.10.040.	SET SCREW - M10X1.5X40 - 8.8	2	
9	50.506.10.000.	PLAIN MACHINED WASHER - M10	6	
10	4H.1484.11.0.00	ALTERNATOR PULLEY FOR POLY V BELT (6 GROVE) 56.5 PCD	1	
11	4H.198.02.0.00	LOCATING BOLT (FOR EYE BOLT) 65MM	1	
12	50.506.12.000.	PLAIN MACHINED WASHER - M12	1	

TITLE: - ALTERNATOR MOUNTING WITH POLY V BELT 6PK	GROUP: - 4H.1481.6

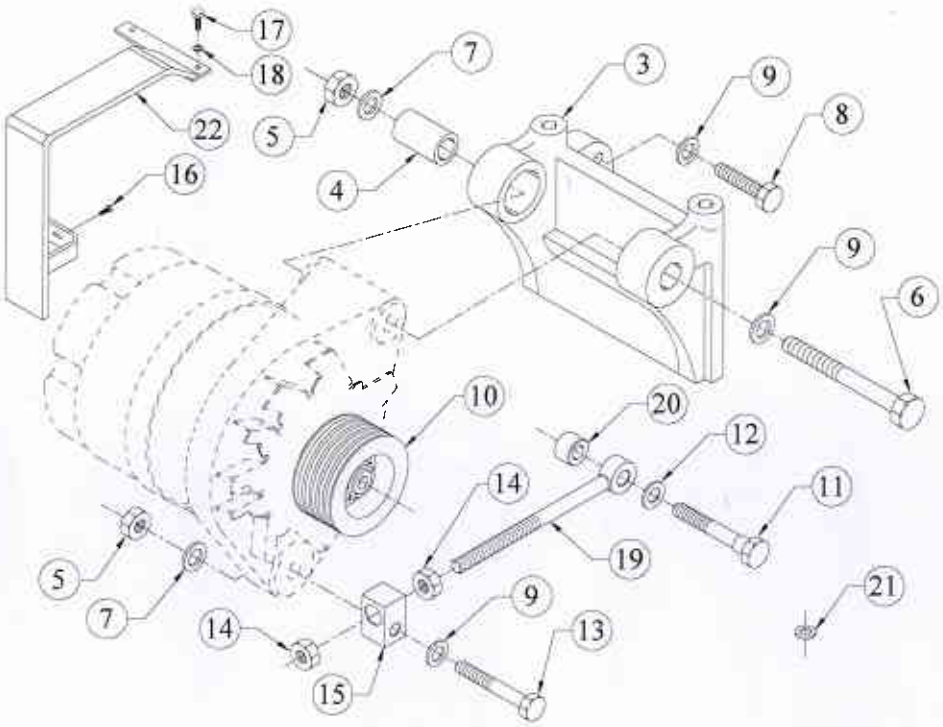

SR.NO.	PART NO.	DESCRIPTION	QTY.	REMARKS
13	50.002.10.055.	SET BOLT - M10X1.5X55 - 8.8	1	
14	50.006.10.000.	NUT - M10X1.5 - GR.8.8	3	
15	4H.329.26.0.00	SWIVEL PIECE	1	
16	50.003.08.016.	SET SCREW - M8X1.25X16 - 8.8	1	
17	50.003.06.012.	SET SCREW - M6X1X12 - 8.8	2	
18	50.506.06.000.	PLAIN MACHINED WASHER - M6	2	
19	F6.018.19.0.00	EYE BOLT	1	
20	4H.561.01.0.00	SPACER 11 I.D. X 24 O.D. X 25.5 L	1	
21	02.022.06.0.00	WASHER	1	
22	4H.198.07.0.00	BELT GAURD FOR ALTERNATOR (S/F COMBINED GEAR CASING)	1	

TITLE: - WATER PUMP PULLEY & FASTENERS	GROUP: - 4H.1483.12

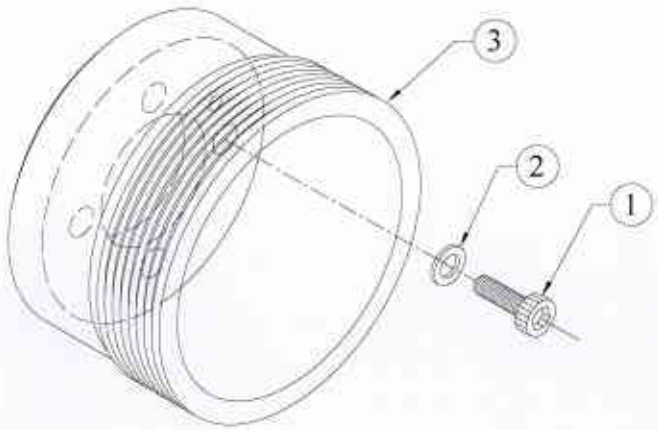

SR.NO.	PART NO.	DESCRIPTION	QTY.	REMARKS
1	50.011.08.020.	SOCKET HEAD SCREW - M8X1.25X20 - 8.8	4	
2	50.506.08.000.	PLAIN MACHINED WASHER - M8	4	
3	4H.1483.11.0.00	WATER PUMP PULLEY FOR 100 P.C.D	1	

TITLE: - POLY V BELT	**GROUP: -** 4H.1493

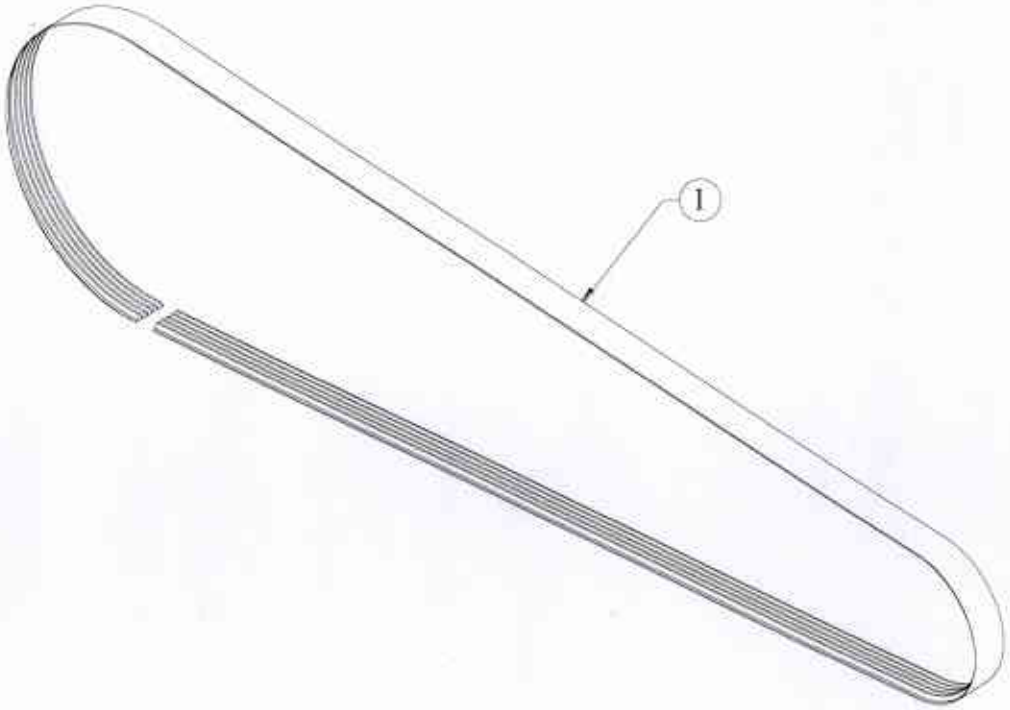

SR.NO.	PART NO.	DESCRIPTION	QTY.	REMARKS
1	4H.1493.01.0.00	POLY V BELT	1	

TITLE: - LUBE OIL DRAIN ARRANGEMENT	GROUP: - 4H.14PM.01

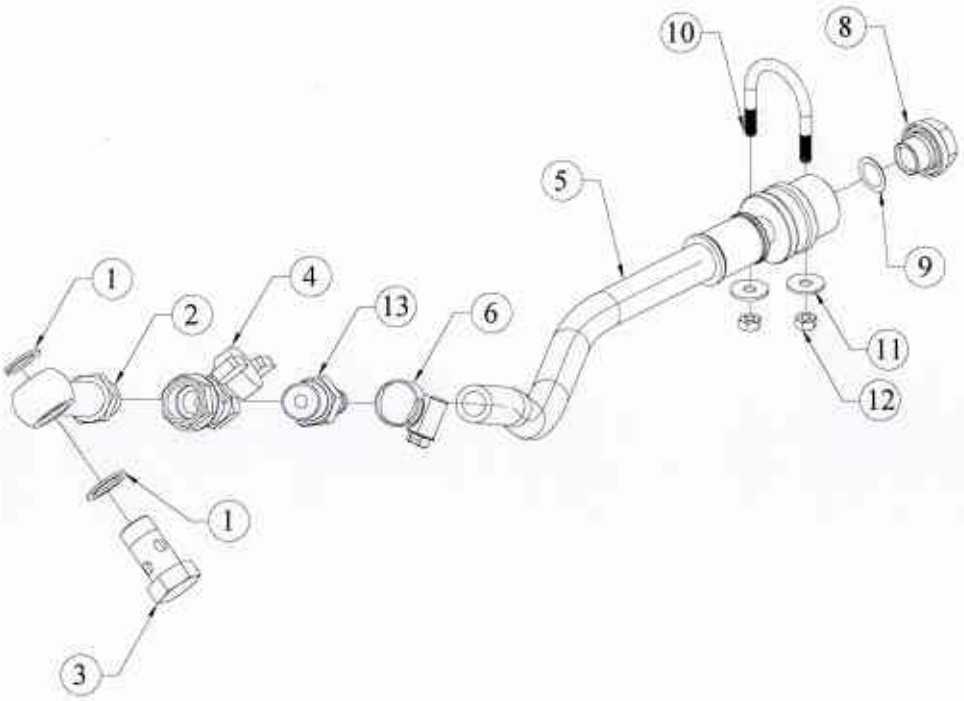

SR.NO.	PART NO.	DESCRIPTION	QTY.	REMARKS
1	50.508.17.000.	COPPER WASHER (18X24)	2	
2	3H.147.09.0.00	ADAPTOR FOR LUB OIL DRAIN	1	
3	50.504.06.000.	BANJO BOLT - M18X1.5	1	
4	3H.153.11.0.00	DRAIN COCK	1	
5	3H.219.03.0.00	DRAIN PIPE FOR LUB OIL SUMP FOR 6R1080T,6R1080TA WITH LENGTH 640MM	1	
6	50.519.03.000.	WORM DRIVE HOSE CLIP (22 MM)	1	
*7	2H.035.20.0.00	PLUG WITH MAGNET & 'O'RING.	1	CONSIST OF SR.NO. 8,9
8	2H.035.10.0.00	DRAIN PLUG ASSEMBLY.	2	
9	F6.024.47.0.00	O - RING FOR DRAIN PLUG	1	
10	04.452.03.0.00	U-CLAMP FOR SUMP DRAIN PIPE	1	
11	03.023.02.0.00	SPL. PLAIN WASHER - M6	2	
12	50.006.06.000.	NUT - M6X1 - GR.8	2	
13	3H.153.12.0.00	ADAPTOR WITH HOSE TAIL	1	

TITLE: - FUEL PUMP (4K-125KVA CPCB II))	**GROUP: -** 4H.1534.2

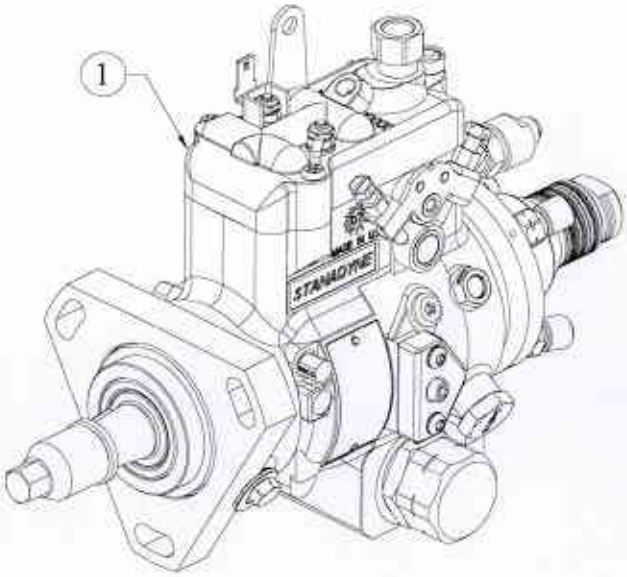

SR.NO.	PART NO.	DESCRIPTION	QTY.	REMARKS
1	4H.1534.06.0.00	STANADYNE FIP FOR 4K1080TA G2 ENGINE (156 HP @ 1500 RPM, CPCB-II, STANADYNE PART NO. DB4431 - 6396)	1	

TITLE: - FUEL PIPING ASSEMBLY	GROUP: - 4H.15PM.02

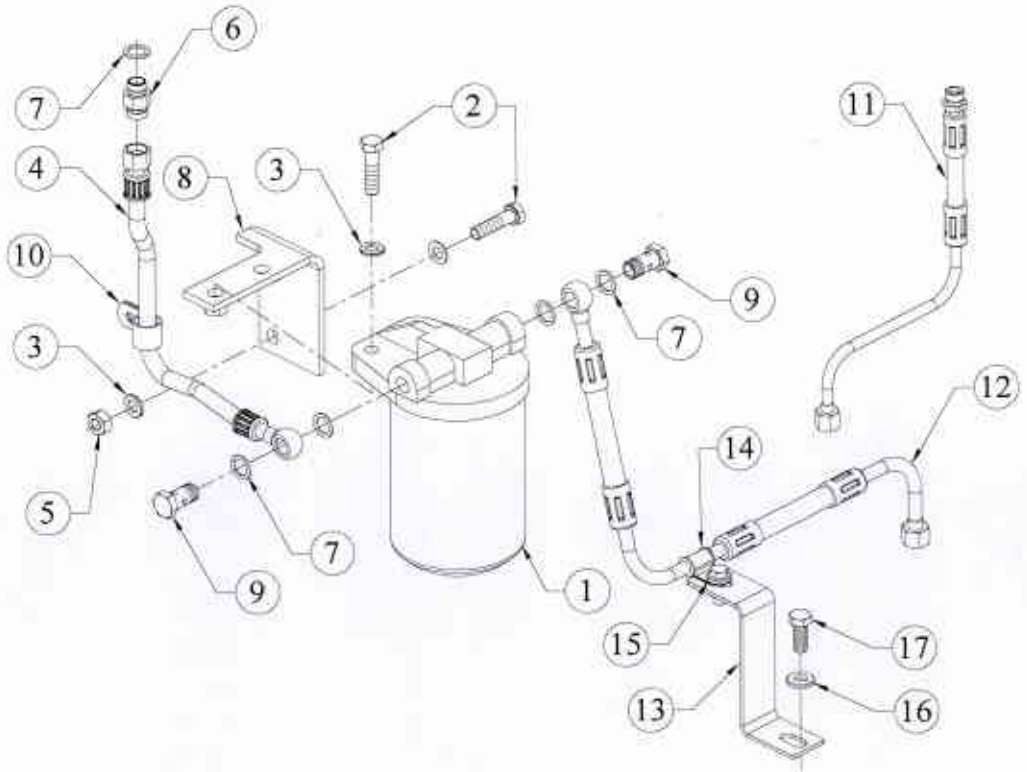

SR.NO.	PART NO.	DESCRIPTION	QTY.	REMARKS
1	43.075.20.0.00	MUD COLLECTOR - FILTER	1	
2	50.002.10.040.	SET BOLT - M10X1.5X40 - 8.8	4	
3	50.506.10.000.	PLAIN MACHINED WASHER - M10	8	
4	F6.708.08.0.00	FUEL PIPE INLET (WATER SEPRATER TO PUMP)	1	
5	50.006.10.000.	NUT - M10X1.5 - GR.8	4	
6	03.208.02.0.00	ADAPTOR FOR INLET CONNECTION	1	
7	50.508.12.000.	COPPER WASHER (14X20)	5	
8	4H.228.11.0.00	BRACKET FOR MUD FILTER	1	
9	50.504.04.000.	BANJO BOLT - M14X1.5	2	
10	2H.028.03.0.00	CLIP FOR BREATHER PIPE.	1	
11	4H.486.14.0.PR	FUEL RETURN PIPE	1	
12	4H.486.13.0.PR	FUEL INLET PIPE FROM TANK TO MUD FILTER	1	
13	KV0.516.05.0.00	FUEL TANK CLAMP FOR 500 KVA	1	
14	DV2.086.60.0.PR	CLAMP ASSEMBLY FOR TURBO OIL SUPPLY PIPE	1	

TITLE: - FUEL PIPING ASSEMBLY	GROUP: - 4H.15PM.02

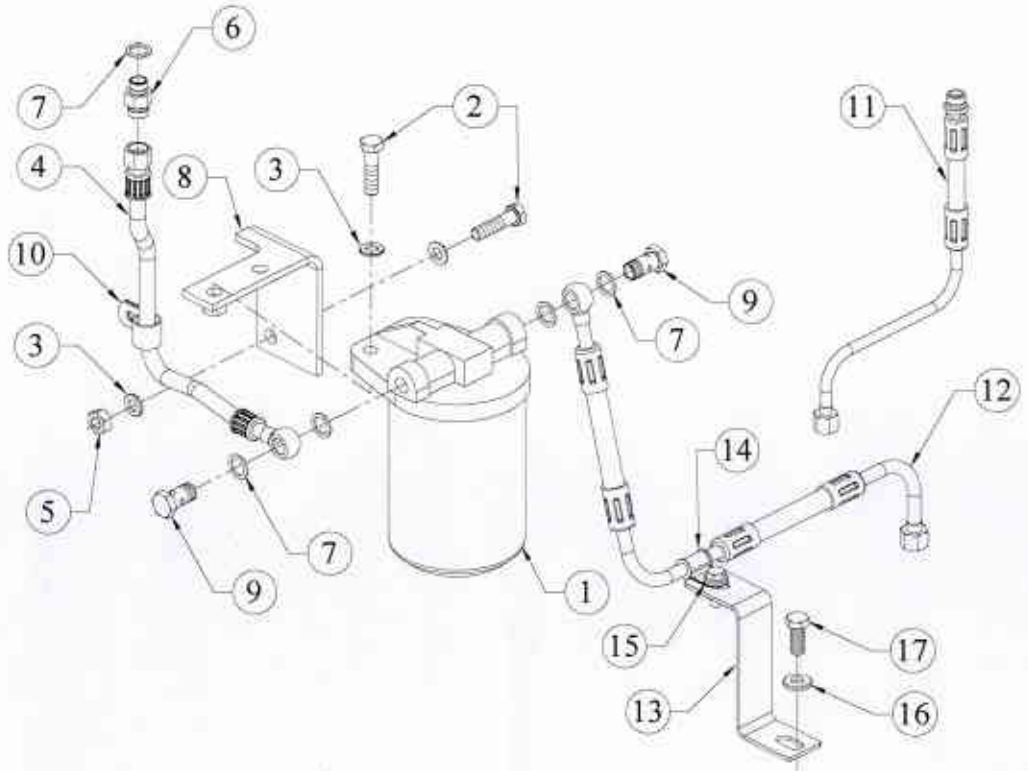

SR.NO.	PART NO.	DESCRIPTION	QTY.	REMARKS
15	50.548.08.000.	SPL.PLAIN M/CED WASHER	2	
16	50.548.10.000.	SPECIAL PLAIN WASHER – M10	1	
17	50.003.10.025.	SET SCREW – M10X1.5X25 – 8.8	1	

TITLE: - BREATHER PIPE	**GROUP: -** 4H.161.3

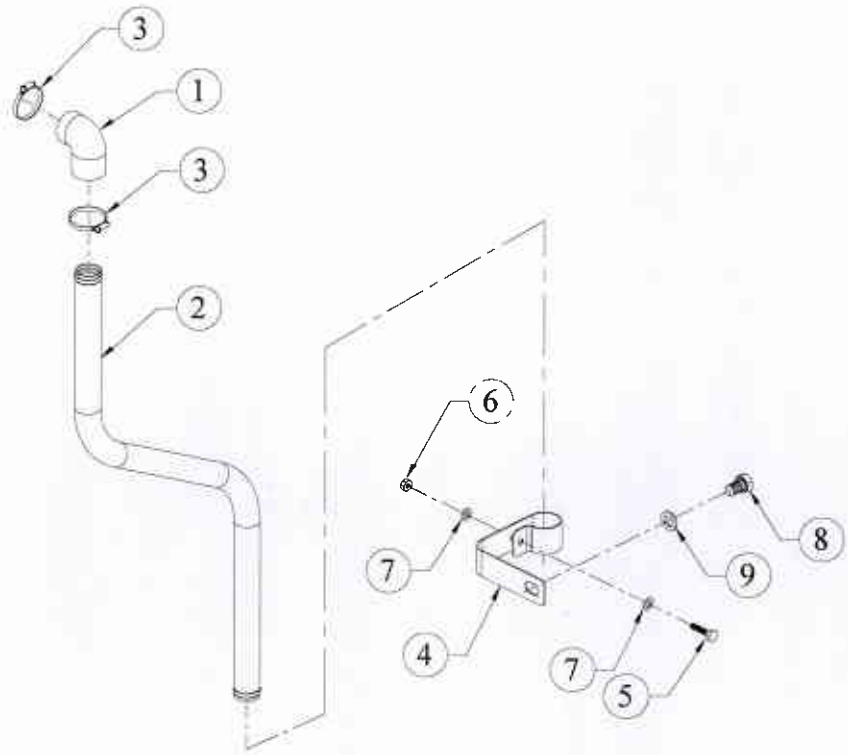

SR.NO.	PART NO.	DESCRIPTION	QTY.	REMARKS
1	4H.1718.07.0.PR	BREATHER HOSE (ROCKER COVER TO BEND PIPE)	1	
2	4H.161.15.0.PR	BEND PIPE FOR BREATHER HOSE	1	
3	50.519.09.000.	HOSE CLIP (48 MM) For 39.464.02.0.00	2	
4	4H.161.16.0.PR	CLAMP FOR BREATHER PIPE	1	
5	50.003.06.025.	SET SCREW - M6X1X25 - 8.8	1	
6	50.006.06.000.	NUT - M6X1 - GR.8	1	
7	50.506.06.000.	PLAIN MACHINED WASHER - M6	2	
8	50.003.12.020.	SET SCREW - M12X1.75X20 - 8.8	1	
9	50.506.12.000.	PLAIN MACHINED WASHER - M12	1	

TITLE: - CYLINDER HEAD (4 VALVE)	GROUP: - 4H.1613

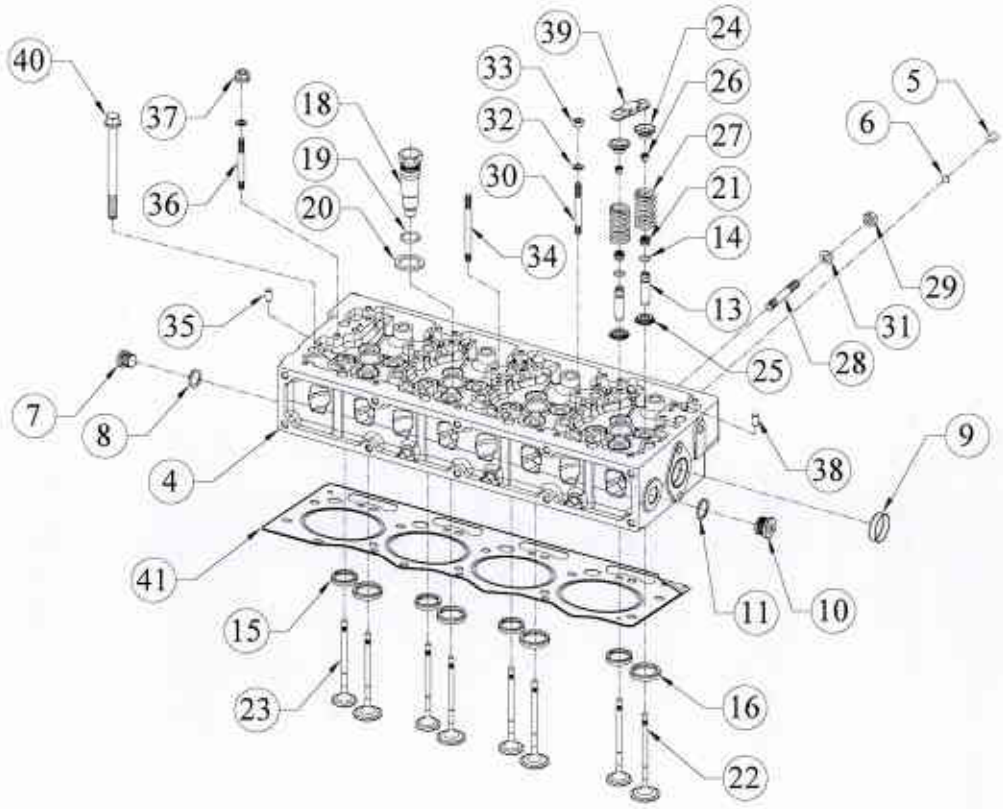

SR.NO.	PART NO.	DESCRIPTION	QTY.	REMARKS
*1	4H.1613.30.0.00	CYL HEAD ASSEMBLY (COMPLETE)	1	CONSISTING OF SR. NO.2 & 21 TO 38
*2	4H.1613.20.0.00	CYL HEAD WITH VALVE GUIDE & VALVE SEAT INSERT	1	CONSISTING OF SR. NO. 3, 12 & 15 TO 17
*3	4H.1613.10.0.00	CYLINDER HEAD ASSLY WITH PLUGS & INJECTOR SLEEVE	1	CONSISTING OF SR. NO. 4 TO 11
4	4H.1613.01.0.PR	CYLINDER HEAD (4K1080 4VALVES) (FINISH)	1	
5	34.003.07.0.00	CRANK SHAFT PLUG - ALUMINIUM	8	
6	34.003.08.0.00	WASHER FOR ALU.PLUG.	8	
7	50.610.16.000.	CORE PLUG-HEXAGONAL SOCKET HEAD(DIN-908)	4	
8	50.508.14.000.	COPPER WASHER (16X22)	4	
9	76.001.58.0.00	SEALING CAP.010 DIN 1131	1	
10	50.610.24.000.	CORE PLUG	1	

TITLE: - CYLINDER HEAD (4 VALVE)	GROUP: - 4H.1613

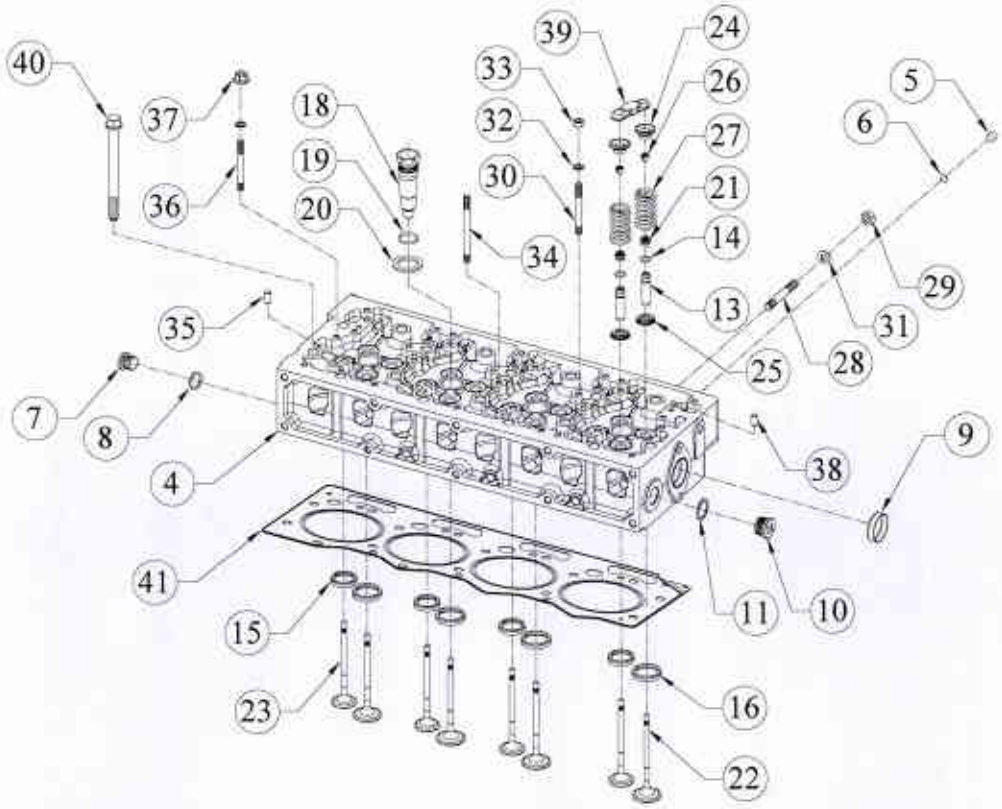

SR.NO.	PART NO.	DESCRIPTION	QTY.	REMARKS
11	50.508.27.000.	COPPER WASHER (24X29)	1	
*12	4H.1613.50.0.00	VALVE GUIDE & SNAP RING ASSY	16	CONSISTING OF SR. NO. 13,14
13	4H.1613.02.9.00	VALVE GUIDE (SEMI FINISH)	1	
14	4H.1613.03.0.00	WIRE SNAP RING	1	
15	4H.1613.04.9.00	VALVE SEAT INSERT (EXHAUST) (SEMIFINISH)	8	
16	4H.1613.05.9.00	VALVE SEAT INSERT (INLET) (SEMI FINISH)	8	
*17	4H.1613.40.0.00	INJECTOR SLEEVE SUB ASSEMBLY	4	CONSISTING OF SR. NO. 18 TO 20
18	4H.1613.06.0.00	INJECTOR SLEEVE	1	
19	4H.1613.07.0.00	O RING FOR INJECTOR SLEEVE	2	
20	50.508.12.000.	COPPER WASHER (14X20)	1	
21	4H.1613.11.0.00	VALVE STEM SEAL	16	
22	4H.1613.12.0.00	INLET VALVE	8	
23	4H.1613.13.0.00	EXHAUST VALVE	8	

TITLE: - CYLINDER HEAD (4 VALVE)	GROUP: - 4H.1613

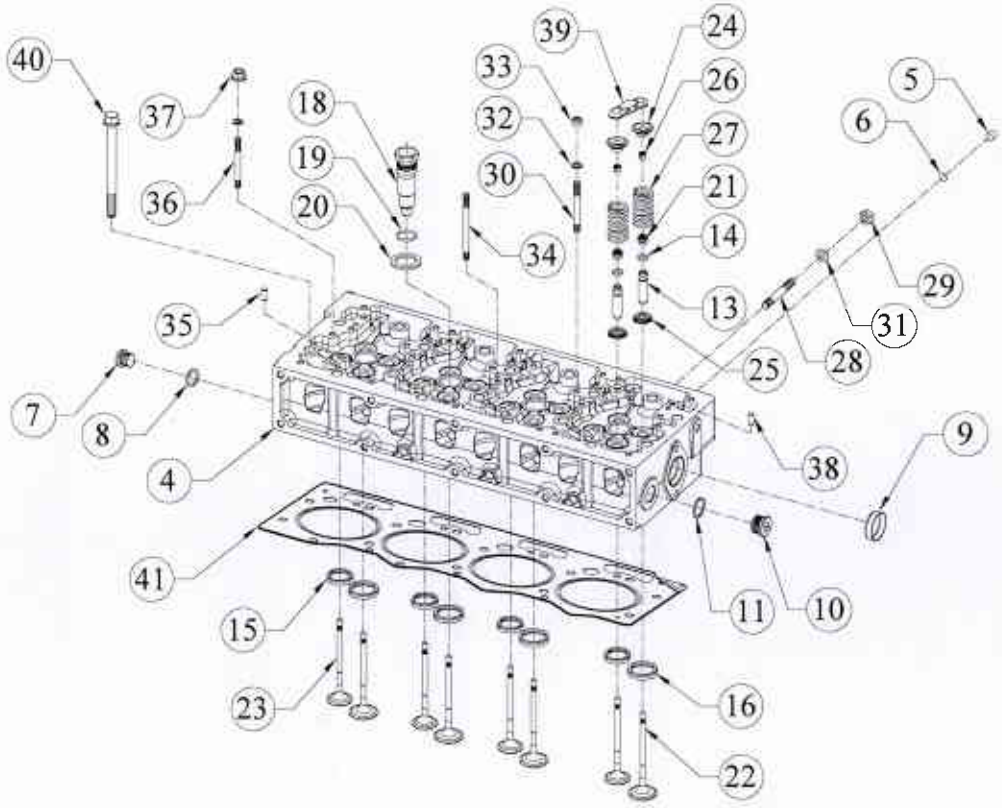

SR.NO.	PART NO.	DESCRIPTION	QTY.	REMARKS
24	4H.1613.14.0.00	VALVE CUP	16	
25	4H.1613.15.0.00	SPRING CUP	16	
26	4H.1613.16.0.00	VALVE COLLET	32	
27	4H.1613.17.0.00	VALVE SPRING	16	
28	T4.122.27.0.PR	STUD (M10X60)	8	
29	T4.122.41.0.PR	NUT - M10X1.5 - GRADE 10	8	
30	50.010.08.065.	STUD - M8 X1.25 X 65 MM - 8.8 GRADE	8	
31	50.506.10.000.	PLAIN MACHINED WASHER - M10	8	
32	50.506.08.000.	PLAIN MACHINED WASHER - M8	8	
33	50.006.08.000.	NUT- M8X1.25 - GR.8	8	
34	50.010.08.095.	STUD - M8X1.25X95 - 8.8	7	
35	50.401.08.016.	DOWEL PIN	4	
36	50.010.08.085.	STUD - M8X1.25X85 - 8.8	6	
37	F6.4004.28.0.00	FLANGE NUT M8X1.25	6	
38	4H.1613.27.0.00	DOWEL FOR ROCKER SUPPORT (4K1080 4 VALVE)	2	
39	4H.1613.18.0.00	VALVE BRIDGE	8	

TITLE: - CYLINDER HEAD (4 VALVE)	GROUP: - 4H.1613

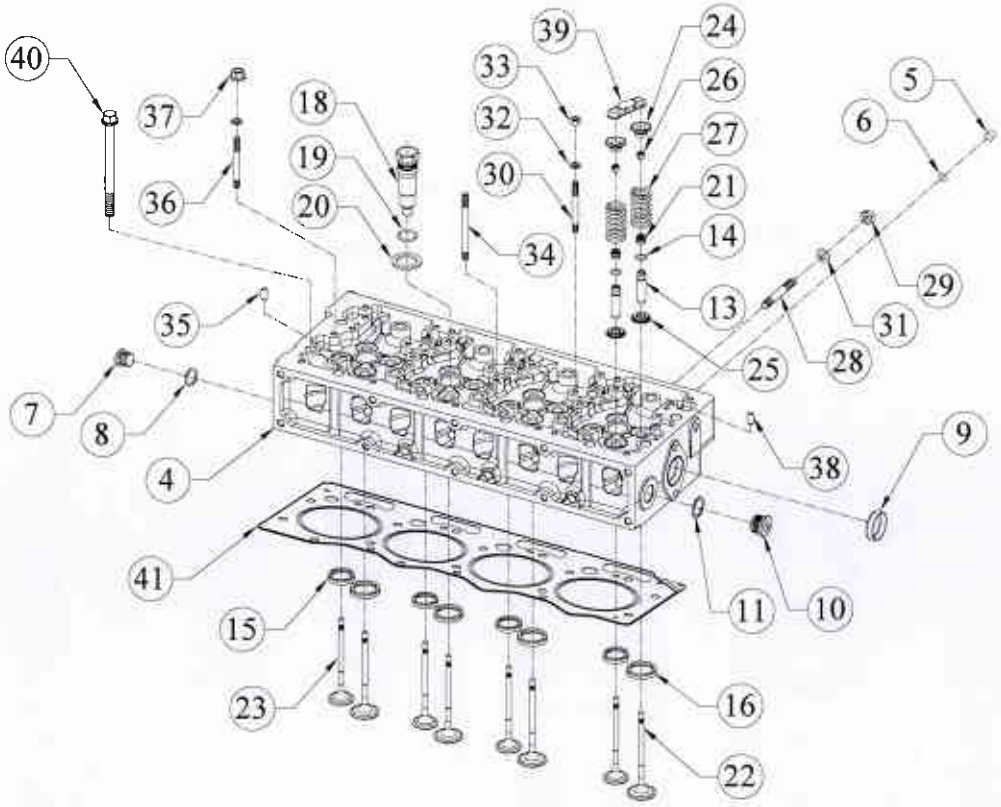

SR.NO.	PART NO.	DESCRIPTION	QTY.	REMARKS
40	4H.007.07.0.00	BOLT FOR CYLINDER HEAD.	18	
41	4H.1613.26.0.PR	CYLINDER HEAD GASKET COMMON FOR (4R1040/4K1080)&(2V/4V)CONFIGURATION.	1	

TITLE: - ROCKER SUPPORT ASSEMBLY (4 VALVES)	GROUP: - 4H.1614

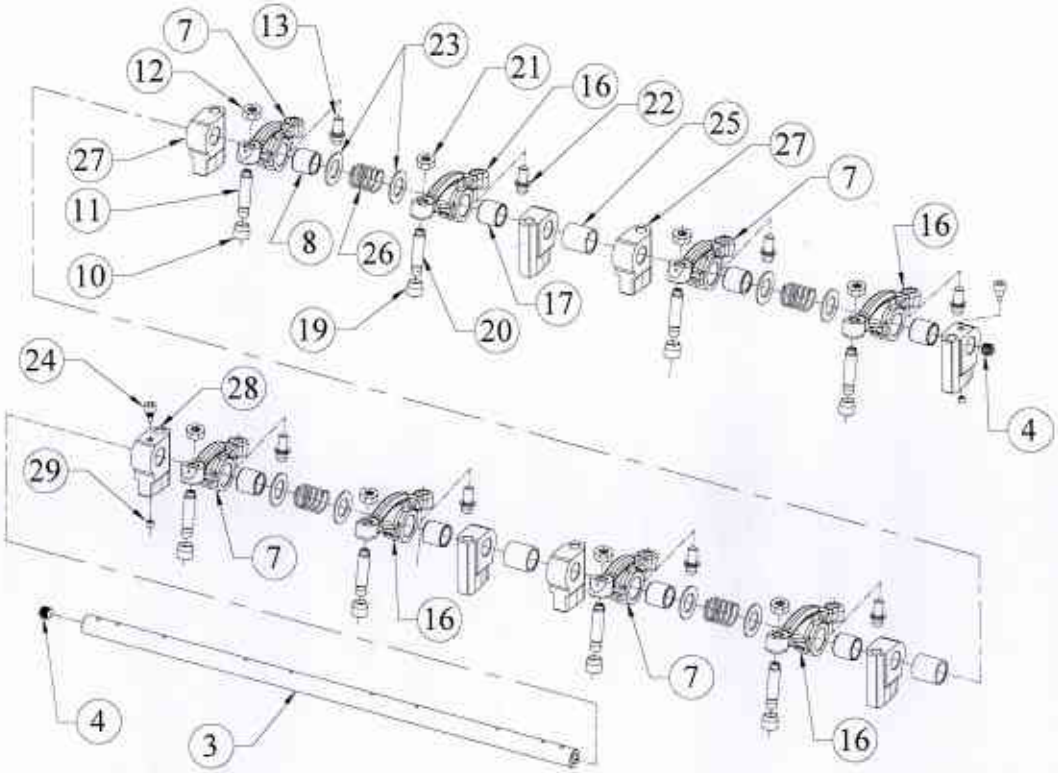

SR.NO.	PART NO.	DESCRIPTION	QTY.	REMARKS
*1	4H.1614.80.0.PR	VALVE ROCKER ASSLY (4K1080 4V)	1	CONSISTING OF SR. NO. 2,5, 14 & 23 TO 28
*2	4H.1614.20.0.00	ROCKER SHAFT SUB ASSEMBLY	1	CONSISTING OF SR. NO. 3,4
3	4H.1614.01.0.00	ROCKER SHAFT (4 VALVE)	1	
4	50.022.12.010.	SOCKET HEAD GRUB SCREW - M12X10	2	
*5	4H.1614.70.0.PR	ROCKER LEVER ASSLY-EXHAUST (WITH MOD. OIL HOLE)(4K1080 4V)	4	CONSISTING OF SR. NO. 6,9 & 12 TO 13
*6	4H.1614.36.0.PR	ROCKER LEVER SUB ASSLY WITH V.R.BUSH(EXHAUST)	1	CONSISTING OF SR. NO. 7,8
7	4H.1614.24.0.PR	ROCKER LEVER EXHAUST (FINISH) FOR 4K1080 4 VALVE	1	NOT SUPPLIED LOOSE
8	4H.1614.06.9.00	V.R. BUSH (SEMIFINISH)	1	NOT SUPPLIED LOOSE
*9	4H.1614.50.0.PR	SPIGOT & ROCKER ADJUSTING SCREW ASSEMBLY	1	CONSISTING OF SR. NO. 10,11

TITLE: - ROCKER SUPPORT ASSEMBLY (4 VALVES)	GROUP: - 4H.1614

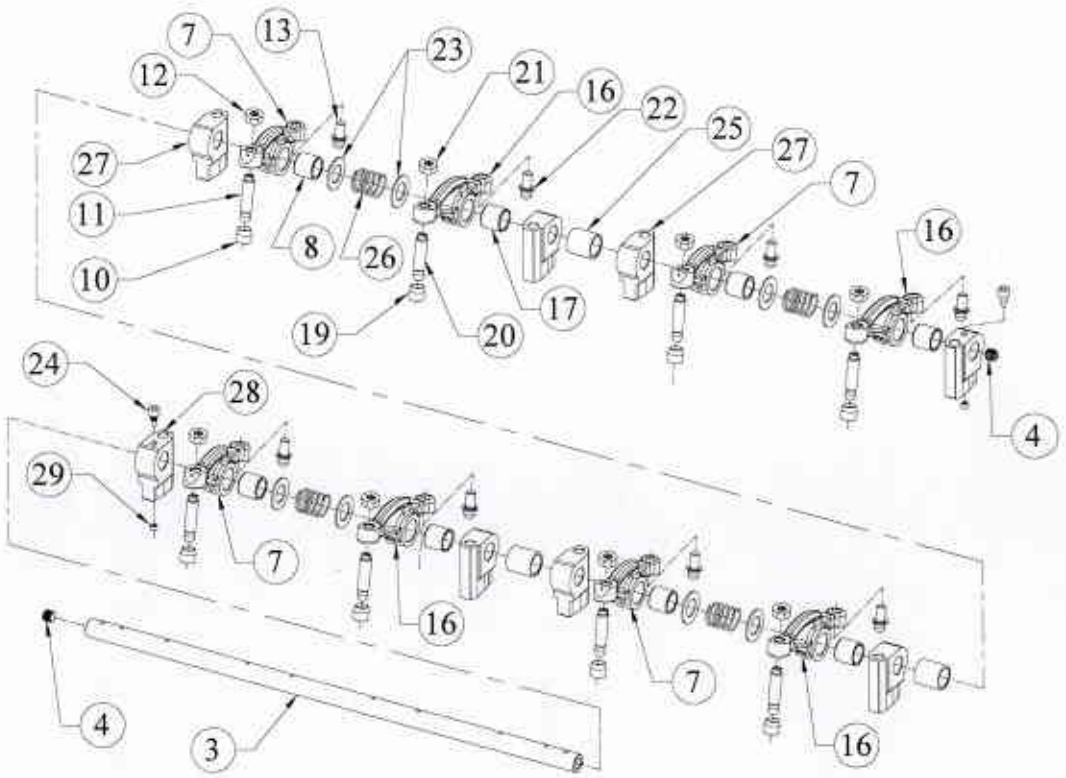

SR.NO.	PART NO.	DESCRIPTION	QTY.	REMARKS
10	4H.1614.18.0.PR	SPIGOT (FOR ROCKER LEVER) (FOR 4V)	1	
11	4H.1614.19.0.PR	ROCKER LEVER ADJUSTING SCREW (4V)	1	
12	02.024.27.0.00	NUT FOR ROCKER ADJ.SCREW	1	
13	4H.1614.08.0.00	V.R. TOE	1	NOT SUPPLIED LOOSE
*14	4H.1614.60.0.PR	ROCKER LEVER ASSLY-INLET (WITH MOD. OIL HOLE)(4K1080 4V)	4	CONSISTING OF SR. NO. 15, 18 & 21 TO 22
*15	4H.1614.26.0.PR	ROCKER LEVER SUB ASSLY WITH V.R.BUSH(INLET)	1	CONSISTING OF SR. NO. 16,17
16	4H.1614.23.0.PR	ROCKER LEVER INLET (FINISH) FOR 4K1080 4 VALVE	1	NOT SUPPLIED LOOSE
17	4H.1614.06.9.00	V.R. BUSH (SEMIFINISH)	1	NOT SUPPLIED LOOSE
*18	4H.1614.50.0.PR	SPIGOT & ROCKER ADJUSTING SCREW ASSEMBLY	1	CONSISTING OF SR. NO. 19,20

TITLE: - ROCKER SUPPORT ASSEMBLY (4 VALVES)	GROUP: - 4H.1614

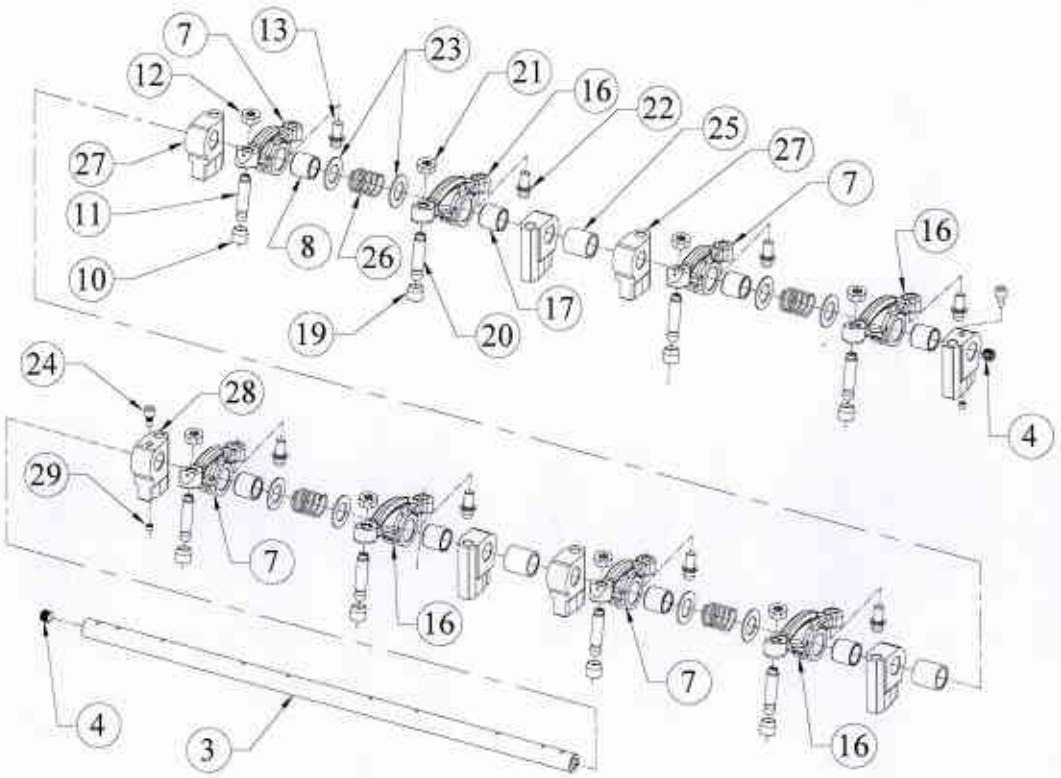

SR.NO.	PART NO.	DESCRIPTION	QTY.	REMARKS
19	4H.1614.18.0.PR	SPIGOT (FOR ROCKER LEVER) (FOR 4V)	1	
20	4H.1614.19.0.PR	ROCKER LEVER ADJUSTING SCREW (4V)	1	
21	02.024.27.0.00	NUT FOR ROCKER ADJ.SCREW	1	
22	4H.1614.08.0.00	V.R. TOE	1	
23	4H.1614.11.0.00	WASHER (FOR ROCKER ARM)	8	
24	4H.1614.12.0.00	SPECIAL SET SCREW	2	
25	4H.1614.22.0.PR	SPACER (ROCKER SUPPORT)	3	
26	4H.1614.13.0.PR	SPRING FOR SHAFT ASSY.	3	
27	6H.1091.03.0.PR	ROCKER SUPPORT (MIDDLE) (6K1080 4 VALVE)	6	
28	6H.1091.04.0.PR	ROCKER SUPPORT (END)	2	
29	2H.022.06.0.00	OIL METERING ORIFICE	1	

TITLE: - PUSHROD & TAPPETS	**GROUP: -** 4H.1614.1

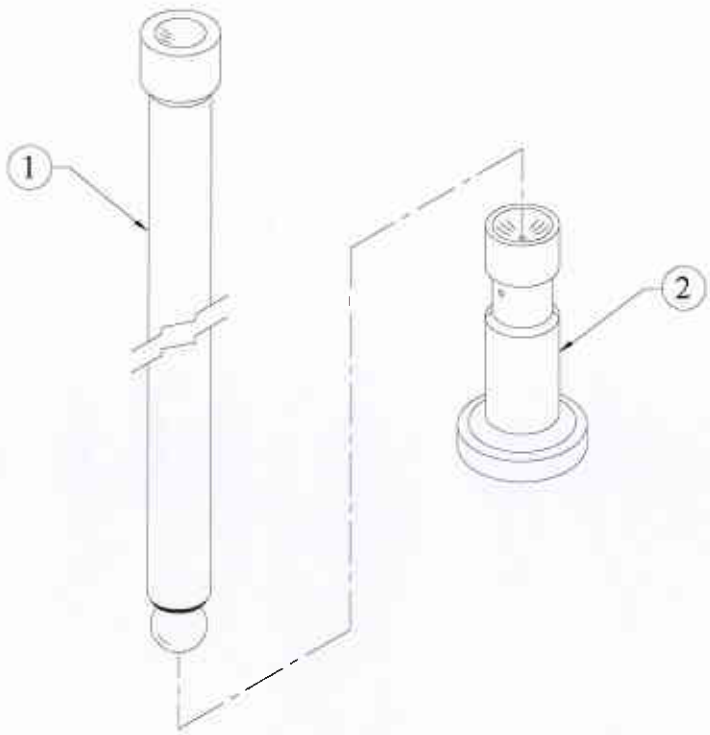

SR.NO.	PART NO.	DESCRIPTION	QTY.	REMARKS
1	4H.1614.16.0.PR	PUSH ROD (WELDED)	2	
2	02.024.01.0.00	VALVE TAPPET	2	

TITLE: - ROCKER BOX (4 VALVE)	**GROUP: -** 4H.1624

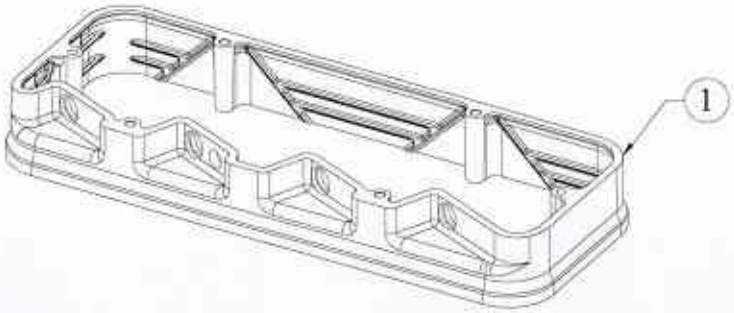

SR.NO.	PART NO.	DESCRIPTION	QTY.	REMARKS
1	4H.1624.02.0.PR	ROCKER BOX	1	

TITLE: - ROCKER COVER (SUITABLE FOR 4 VALVE HEAD)	GROUP: - 4H.1625

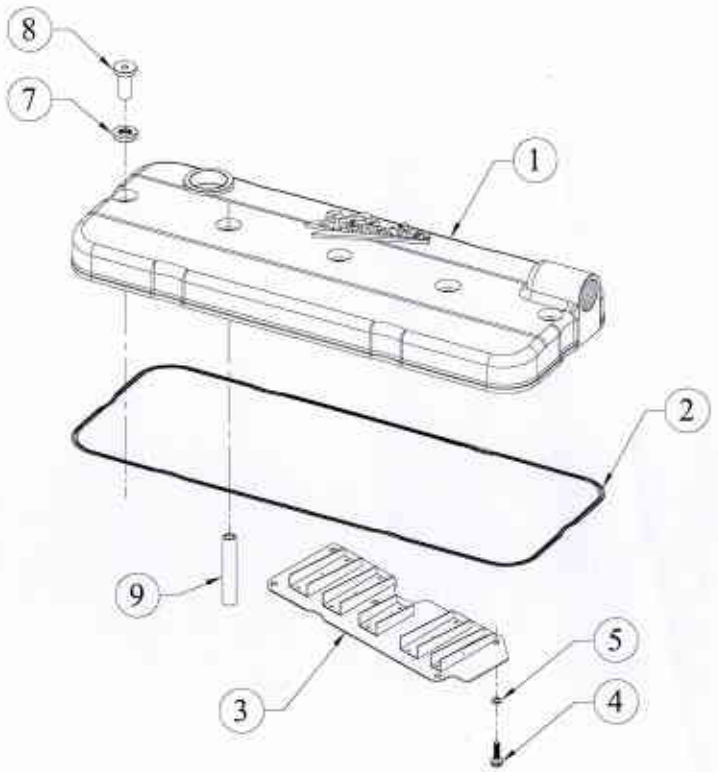

SR.NO.	PART NO.	DESCRIPTION	QTY.	REMARKS
1	4H.1625.11.0.PR	ROCKER COVER (FINISH)	1	
2	4H.1625.26.0.PR	O RING FOR ROCKER COVER	1	
3	4H.1625.23.0.PR	BAFFLE PLATE (SHEET METAL) FOR ROCKER COVER	1	
4	50.076.06.014	SOCKET HEAD CAP SCREW-M6X14-12.9	5	
5	50.506.06.000	PLAIN MACHINED WASHER - M6	5	
*6	4H.1625.10.0.00	DOME NUT & GROMMET (SUB ASSLY)	5	CONSISTING OF SR. NO. 7,8
7	4H.1625.03.0.00	GROMMET (FOR ROCKER COVER)	1	
8	4H.1625.27.0.PR	DOME NUT (FOR ROCKER COVER)	1	
9	4H.1614.21.0.PR	SPACER BETWEEN HEAD & ROCKER BOX COVER	3	

TITLE: - INLET MANIFOLD (4 VALVE)	GROUP: - 4H.1629

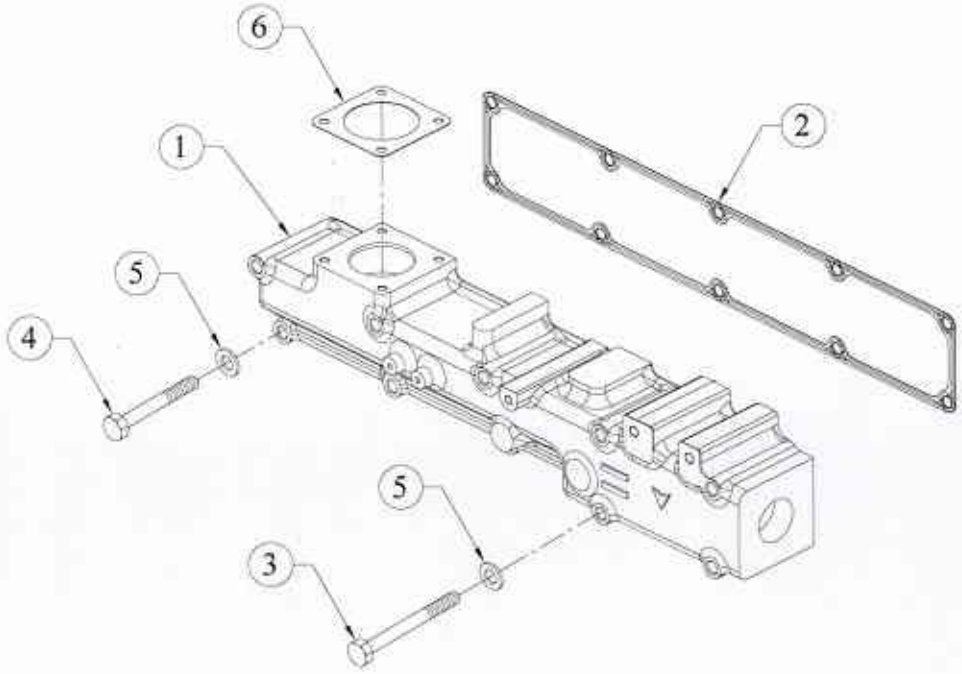

SR.NO.	PART NO.	DESCRIPTION	QTY.	REMARKS
1	4H.1629.04.0.PR	INLET MANIFOLD (4K1080 4V)	1	
2	4H.1629.03.0.00	JOINT FOR AIR INLET MANIFOLD (4 VALVE DESIGN)	1	
3	50.002.10.110.	SET BOLT - M10X1.5X110 - 8.8	7	
4	50.002.10.080.	SET BOLT - M10X1.5X80 - 8.8	3	
5	50.506.10.000.	PLAIN MACHINED WASHER - M10	10	
6	4H.223.11.0.00	JOINT FOR AIR INLET PIPE (ARMSTRONG TS9013)	1	

TITLE: - EXHAUST MANIFOLD (4 VALVE)	**GROUP: -** 4H.1630

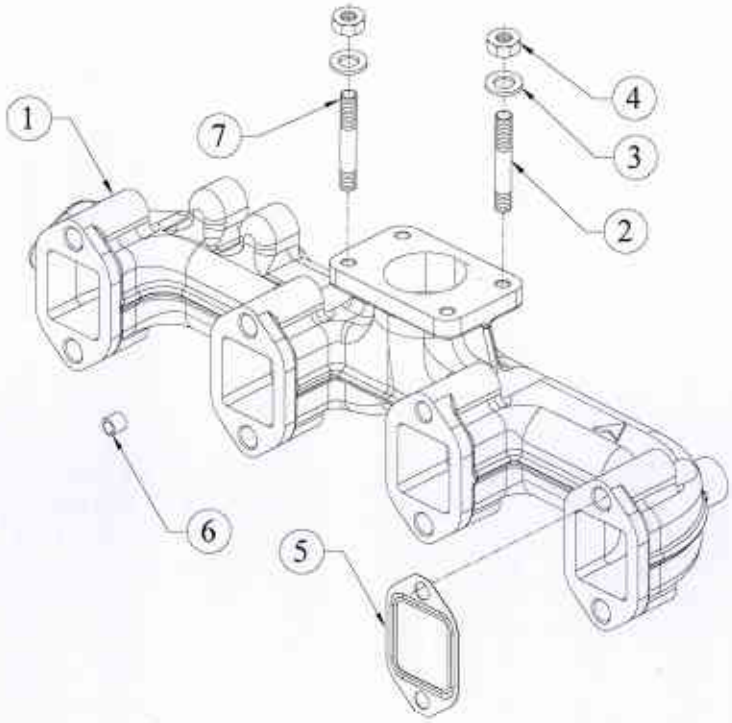

SR.NO.	PART NO.	DESCRIPTION	QTY.	REMARKS
1	4H.1630.07.0.PR	EXHAUST MANIFOLD (4K1080 4 VALVE)	1	
2	T4.122.31.0.PR	STUD (M8 X 25)	1	
3	50.506.08.000.	PLAIN MACHINED WASHER - M8	4	
4	T4.122.39.0.PR	NUT - M8X1.25 - GRADE 10	4	
5	4H.1630.02.0.00	GASKET FOR EXHAUST MANIFOLD	4	
6	34.001.23.0.00	DOWEL FOR GEAR CASING	3	
7	DV0.040.53.0.00	STUD FOR PUMP MOUNTING	3	

TITLE: - THERMOSTAT HOUSING	GROUP: - 4H.1641

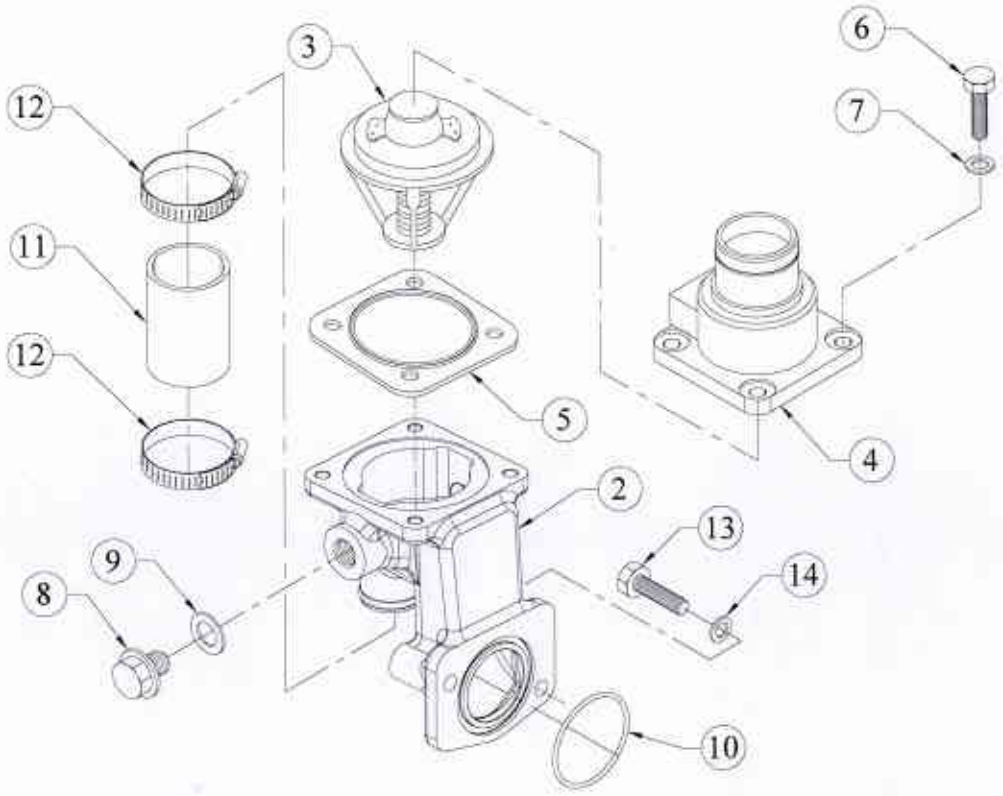

SR.NO.	PART NO.	DESCRIPTION	QTY.	REMARKS
*1	4H.1641.10.0.PR	THERMOSTAT & HOUSING ASSEMBLY (UPWORD OPENING)	1	CONSISTING OF SR. NO. 2 TO 9
2	4H.1641.01.0.00	THERMOSTAT HOUSING M14 TAP BOTH SIDES	1	
3	39.040.09.0.00	THERMOSTAT ELEMENT(74 DEG) - WTIL NO.DEV358	1	
4	4H.096.03.0.00	THERMOSTAT COVER, TOP OPEN	1	
5	4H.053.08.0.00	JOINT FOR THERMOSTAT COVER (METTALIC)	1	
6	50.003.08.025.	SET SCREW - M8X1.25X25 - 8.8	4	
7	50.506.08.000.	PLAIN MACHINED WASHER - M8	4	
8	50.602.14.000.	PLUG (M14X1.5)	1	
9	50.508.11.000.	COPPER WASHER (14X18)	1	
10	4H.1641.02.0.00	'O' Ring	1	
11	4H.023.02.0.00	THERMOSTAT BYPASS HOSE	1	
12	2H.112.02.0.00	WORM DRIVE CLAMP (JUPITOR JW7B13, 29 TO 45 DIA)	2	
13	50.003.08.045.	SET SCREW - M8X1.25X45 - 8.8	2	

TITLE: - THERMOSTAT HOUSING	GROUP: - 4H.1641

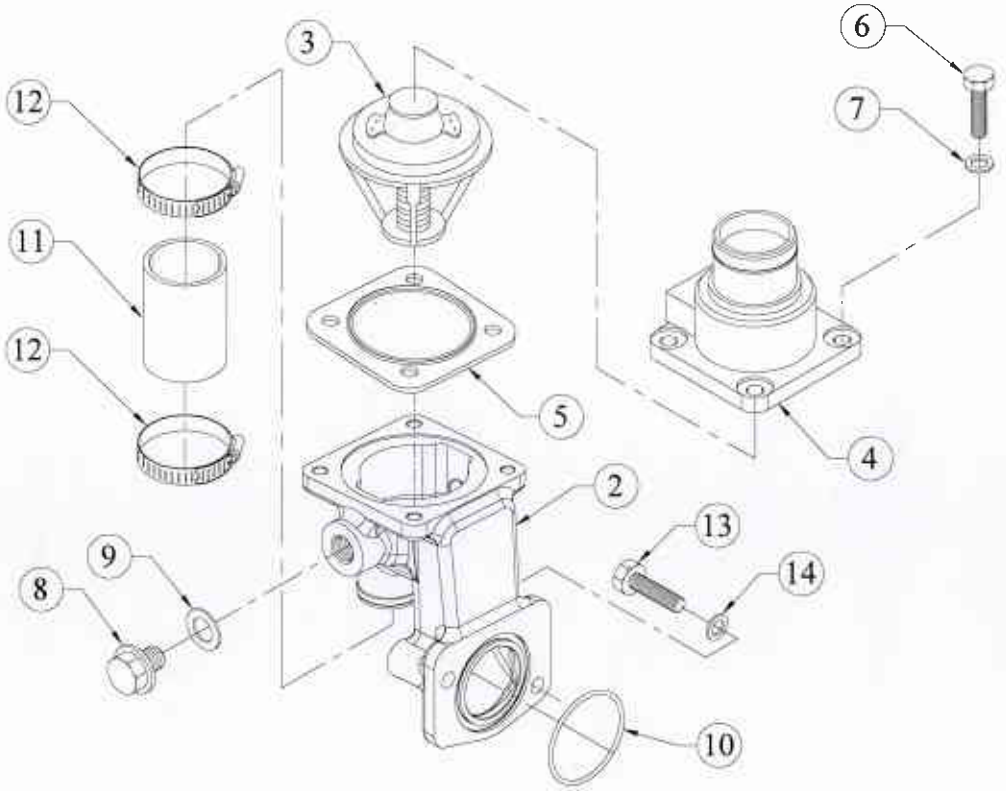

SR.NO.	PART NO.	DESCRIPTION	QTY.	REMARKS
14	50.506.08.000.	PLAIN MACHINED WASHER - M8	2	

TITLE: - PISTON GALLERY COOLED (4K 4V ENGINE)	GROUP: - 4H.1650.1

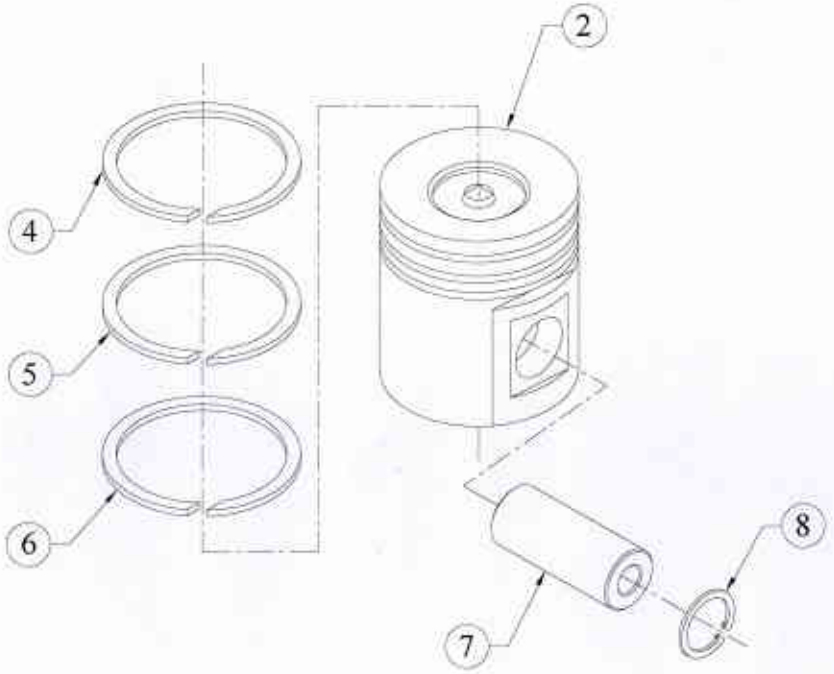

SR.NO.	PART NO.	DESCRIPTION	QTY.	REMARKS
*1	4H.1650.60.0.00	PISTON ASSEMBLY COMPLETE (GALLERY COOLED PISTON 4K 4V)	1	CONSISTING OF SR. NO 2 TO 5
2	4H.1650.13.0.00	4K1080 TA 4V GALLERY COOLED PISTON FOR CPCB II	1	NOT SUPPLIED LOOSE
*3	4H.1650.20.0.00	RING SET (FOR GALLERY COOLED PISTON)	1	CONSISTING OF SR. NO. 4 TO 6
4	6H.247.11.0.00	KEYSTONE RING 105 DIA FOR 6K1080TA (SPR MAKE , SUPPLIER DWG NO RD/RG-1/OT-J04)	1	NOT SUPPLIED LOOSE
5	6H.247.12.0.00	TAPER COMPRESSION RING 105 DIA FOR 6K1080TA (SPR MAKE DWG NO:RD/RG-2/OT-J04)	1	NOT SUPPLIED LOOSE
6	4H.1650.04.0.00	CONFORMABLE OIL RING FOR 4K1080TA - 125 KVA ENGINE (SS - DIESEL VENT RING) (DWG NO. RD/RG-3/OT-L21)	1	NOT SUPPLIED LOOSE

TITLE: - PISTON GALLERY COOLED (4K 4V ENGINE)	**GROUP: -** 4H.1650.1

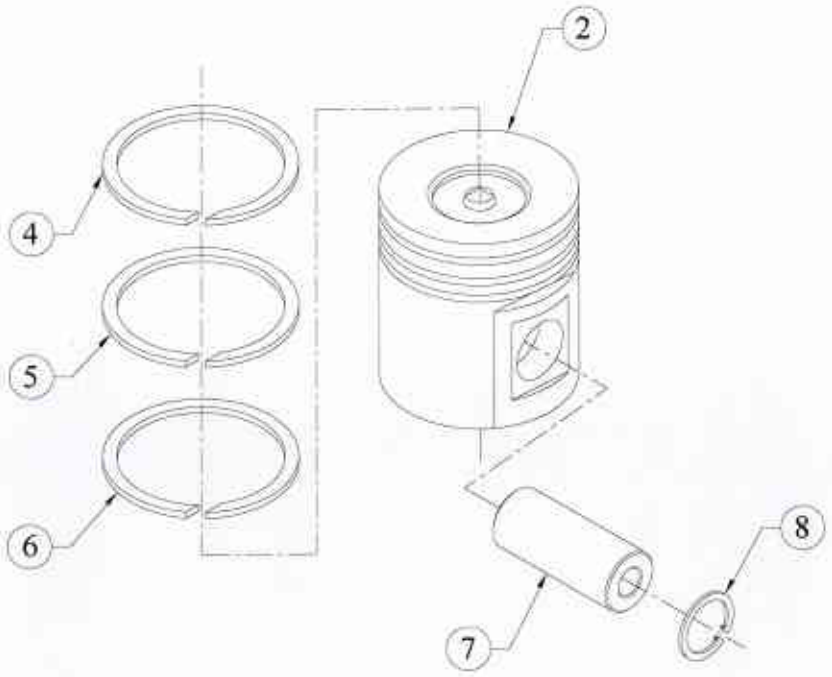

SR.NO.	PART NO.	DESCRIPTION	QTY.	REMARKS
7	6H.247.14.0.00	PISTON PIN 42.1 MM DIA FOR 6K1080TA (SPE MAKE SUPPLIER DWG NO:RD/PN/OT-K07)	1	
8	50.502.42.000.	CIRCLIP INTERNAL – 42 MM	2	

TITLE: - LEAK OFF PIPE	**GROUP: -** 4H.1658.2

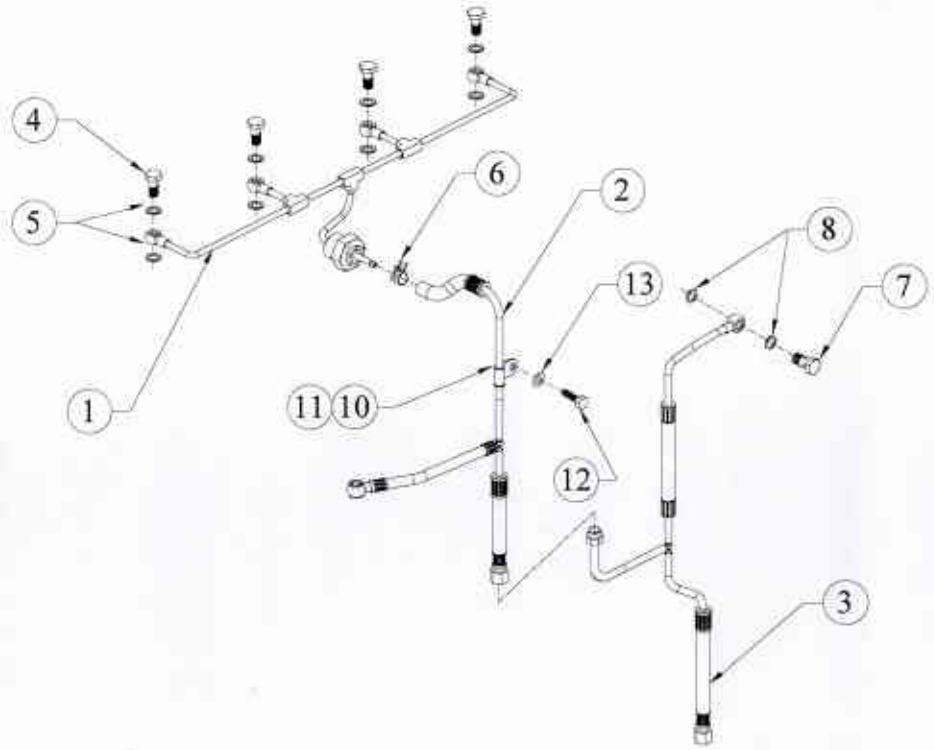

SR.NO.	PART NO.	DESCRIPTION	QTY.	REMARKS
1	4H.1658.01.0.PR	LEAK OFF PIPE ASSEMBLY (INTERNAL, 4 VALVE DESIGN)	1	
2	4H.1658.04.0.PR	LEAK OFF PIPE (FOR FIP & INJECTOR)	1	
3	4H.1658.07.0.PR	LEAK OFF PIPE (FOR FILTER)	1	
4	03.027.04.0.00	BANJO BOLT	4	
5	4H.010.93.0.00	MICO COPPER WASHER FOR LEAK OFF PIPE (MICO NO. 2 916 710 603)	8	
6	02.500.08.0.00	CONSTANT PRESSURE SPRING BAND HOSE CLAMP KLIPCO NOMINAL SIZE 10 MM	1	
7	50.504.03.000	BANJO BOLT - M12X1.5	2	
8	50.508.09.000	COPPER WASHER (12X16)	4	
*9	4H.1658.10.0.PR	CLAMP ASSEMBLY (FOR EXTERNAL LEAK OFF)	1	CONSISTING OD SR. NO. 10 & 11
10	DV2.086.157.0.PR	CLAMP FOR FUEL PIPE	1	
11	DV2.086.156.0.PR	RUBBER SLEEVE FOR FUEL PIPE	1	

TITLE: - LEAK OFF PIPE	GROUP: - 4H.1658.2

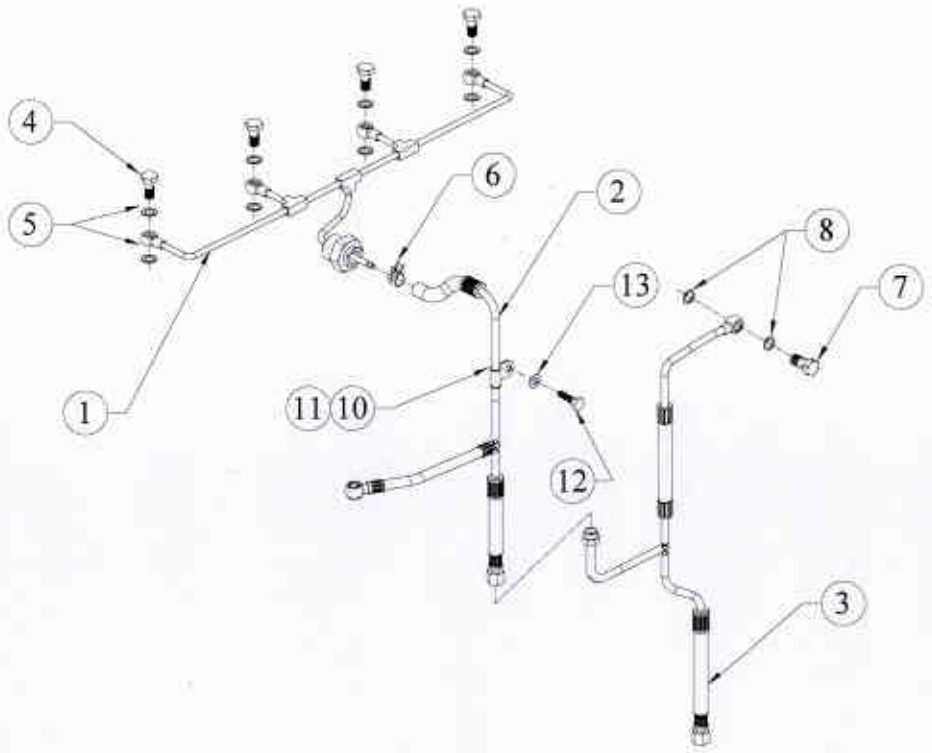

SR.NO.	PART NO.	DESCRIPTION	QTY.	REMARKS
12	50.003.08.016	SET SCREW - M8X1.25X16 - 8.8	1	
13	50.506.08.000	PLAIN MACHINED WASHER - M8	1	

TITLE: - HIGH PRESSURE PIPE (SUITABLE FOR 4 VALVE HEAD)	**GROUP: -** 4H.1659

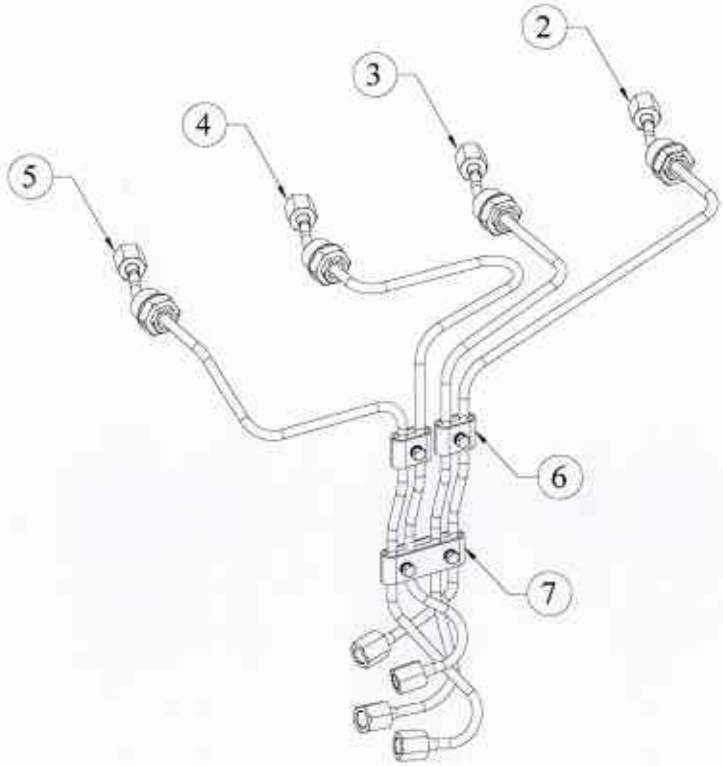

SR.NO.	PART NO.	DESCRIPTION	QTY.	REMARKS
*1	4H.1659.50.0.PR	H.P.PIPE ASSEMBLY	1	CONSISTING OF SR. NO. 2 TO 7
2	4H.1659.10.0.00	H.P.PIPE ASSLY.BEND,640 MM,CYL.NO.1 (4 VALVE	1	
3	4H.1659.20.0.00	H.P.PIPE ASSLY,BEND,640 MM,CYL.NO.2 (4 VALVE)	1	
4	4H.1659.30.0.00	H.P. PIPE ASSLY (BEND, 640MM CYL. NO.3 (4 VALVE	1	
5	4H.1659.40.0.00	H.P.PIPE ASSLY,BEND,640 MM,CYL.NO.4 (4 VALVE)	1	
6	DV0.021.100.0.00	HIGH PRESSURE PIPE CLAMP ASSEMBLY (FOR 2 GROOVES)	2	
7	4H.1659.70.0.PR	H.P.PIPE CLAMP ASSEMBLY (4 GROOVE)	1	

TITLE: - LEVEL 1 KG934 CONTROLLER AND CONNECTOR ASSEMBLY	GROUP: - 4H.16PK.01

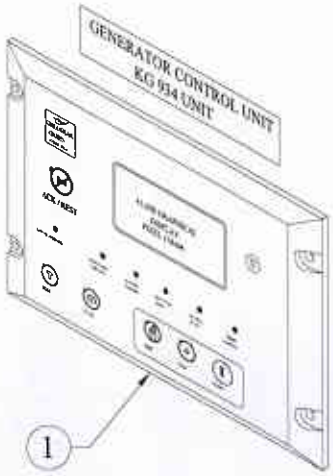

SR.NO.	PART NO.	DESCRIPTION	QTY.	REMARKS
1	2H.894.06.0.00	GENERATOR CONTROL UNIT KG934 LEVEL -1	1	
*2	2H.241.60.0.00	CONNECTOR ASSEMBLY FOR CONTROL PANEL WITH KG934 UNIT	1	CONSISTING OF SR. NO. 3 TO 9
*3	KV8.853.13.0.00	6 PIN CONNECTOR MOLEX MAKE (TYPE MOLEX 5557- 06R) WITH FEMALE PINS	1	NOT ILLUSTRATED
*4	KV8.853.11.0.00	2PIN CONNECTOR MOLEX MAKE (TYPE MOLEX 5557- 02R) WITH FEMALE PINS	1	NOT ILLUSTRATED
*5	KV8.853.17.0.00	14 PIN CONNECTOR MOLEX MAKE (TYPE MOLEX 5557- 014R) WITH FEMALE PINS	1	NOT ILLUSTRATED
*6	KV8.853.14.0.00	4 PIN CONNECTOR MOLEX MAKE (TYPE MOLEX 5557- 04R) WITH FEMALE PINS	1	NOT ILLUSTRATED
*7	4H.971.16.0.00	POWER MATE CONNECTOR 4 PIN (MALE CONNECTOR FEMALE PINS)	1	NOT ILLUSTRATED

TITLE: - LEVEL 1 KG934 CONTROLLER AND CONNECTOR ASSEMBLY	GROUP: - 4H.16PK.01

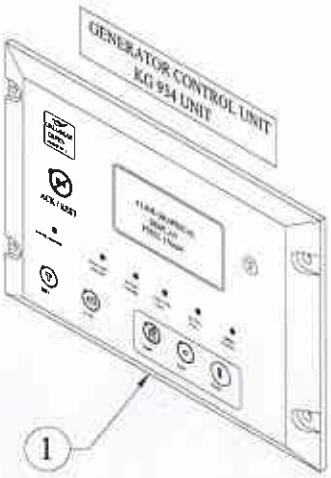

SR.NO.	PART NO.	DESCRIPTION	QTY.	REMARKS
*8	2H.894.16.0.00	LUGS SUITABLE FOR ALL MOLEX CONNECTORS OF KG934 UNIT	30	NOT ILLUSTRATED
*9	2H.894.17.0.00	LUG SUITABLE FOR POWERMATE CONNECTORS OF KG934 UNIT	4	NOT ILLUSTRATED

TITLE: - CONTROL PANEL CONNECTOR ASSEMBLY	GROUP: - 4H.16PK.03

SR.NO.	PART NO.	DESCRIPTION	QTY.	REMARKS
*1	DV0.853.50.0.00	TYCO MAKE CONNECTOR FOR PANEL SIDE	1	CONSISTING OF SR. NO. 2 TO 6
*2	47.569.11.0.00	4PIN CONNECTOR HOUSING TYCO MAKE (MALE) TYPE-235304-1	1	
*3	47.569.12.0.00	50 AM. TERMINAL TYCO MAKE (MALE) TYPE-280075-2	4	
*4	47.569.13.0.00	15PIN CONNECTOR HOUSING TYCO MAKE (MALE) TYPE- 85114-1	1	
*5	47.569.14.0.00	20 AMP. TERMINAL TYCO MAKE (MALE) TYPE-170341-1	3	
*6	47.569.15.0.00	5 AMP. TERMINAL TYCO MAKE (MALE) TYPE-173645-1	12	

TITLE :- CENTRIFUGE LUB OIL FILTER	**GROUP :-** 4H.1939

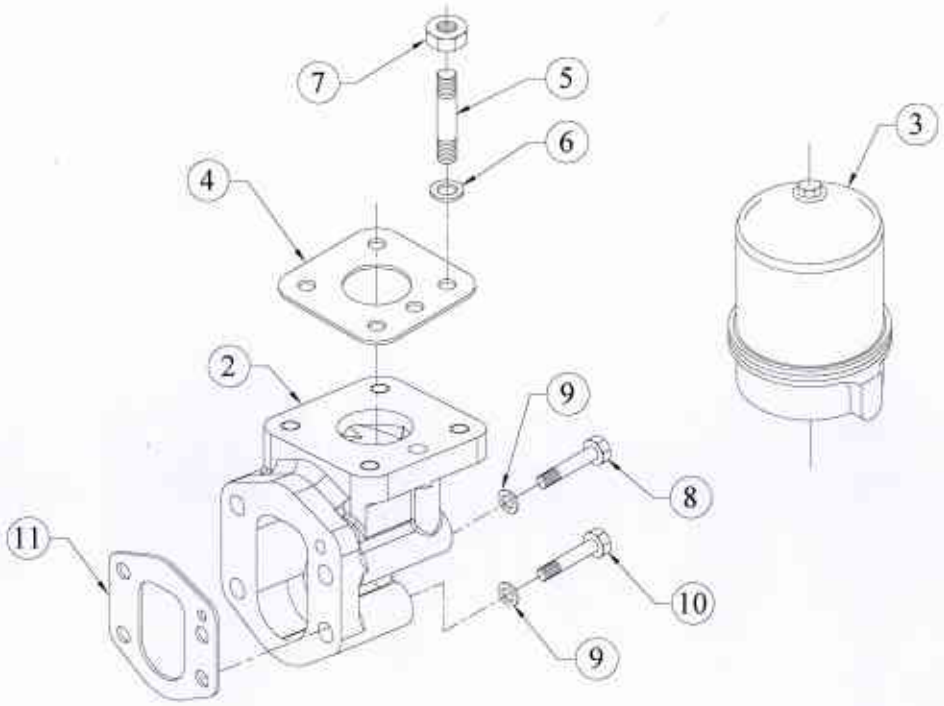

SR.NO.	PART NO.	DESCRIPTION	QTY.	REMARKS
*1	4H.1939.10.0.00	CENTRIFUGE FILTER & ADAPTOR ASSLY.	1	CONSISTING OF SR. NO. 2 TO 7
2	4H.1939.01.0.00	ADAPTOR (FOR CENTRIFUGE LUB. OIL FILTER)	1	
3	F6.024.46.0.00	CENTRIFUGE FILTER	1	
4	F6.024.75.0.00	JOINT FOR GLACIER FILTER	1	
5	50.010.08.025.	STUD - M8X1.25X025 - 8.8	4	
6	50.506.08.000.	PLAIN MACHINED WASHER - M8	4	
7	50.006.08.000.	NUT- M8X1.25 - GR.8	4	
8	50.002.08.055.	SET BOLT - M8X1.25X55 - 8.8	2	
9	50.506.08.000.	PLAIN MACHINED WASHER - M8	4	
10	50.002.08.075.	SET BOLT - M8X1.25X75 - 8.8	2	
11	6H.021.11.0.00	JOINT FOR CENTRIFUGAL FILTER ADAPTOR	1	

TITLE: - FUEL FILTER & MTG. (4K1080 4VALVE)	GROUP: - 4H.1942.2

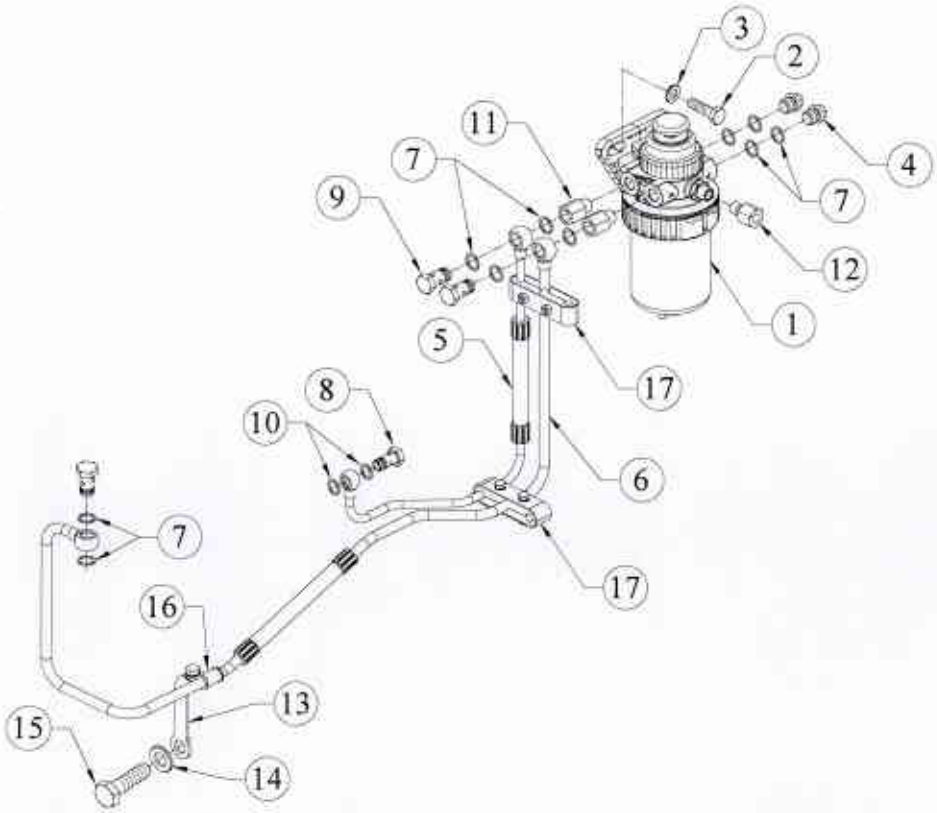

SR.NO.	PART NO.	DESCRIPTION	QTY.	REMARKS
1	06.474.50.0.00	FUEL FILTER FOR HA494,HA694 BSIII ENGINE WITH AIR BLEED ARRANGEMENT, MAKE:STANADYNE	1	
2	50.003.10.035.	SET SCREW - M10X1.5X35 - 8.8	2	
3	50.506.10.000.	PLAIN MACHINED WASHER - M10	2	
4	50.602.14.000.	PLUG (M14X1.5)	2	
5	4H.1942.13.0.PR	FUEL PIPE (FUEL FILTER TO FIP)	1	
6	4H.1942.12.0.PR	FUEL PIPE (FEED PUMP TO FUEL FILTER)	1	
7	50.508.11.000.	COPPER WASHER (14X18)	10	
8	50.504.03.000.	BANJO BOLT - M12X1.5	1	
9	50.504.04.000.	BANJO BOLT - M14X1.5	3	
10	50.508.09.000.	COPPER WASHER (12X16)	2	
11	6H.081.15.0.PR	ADAPTOR ON FUEL FILTER (FOR FUEL PIPES)	2	
12	06.474.19.0.00	ADAPTOR FOR AIR BLEED FILTER (1/8NPTF X M12X1.5)	1	

TITLE: - FUEL FILTER & MTG. (4K1080 4VALVE)	**GROUP: -** 4H.1942.2

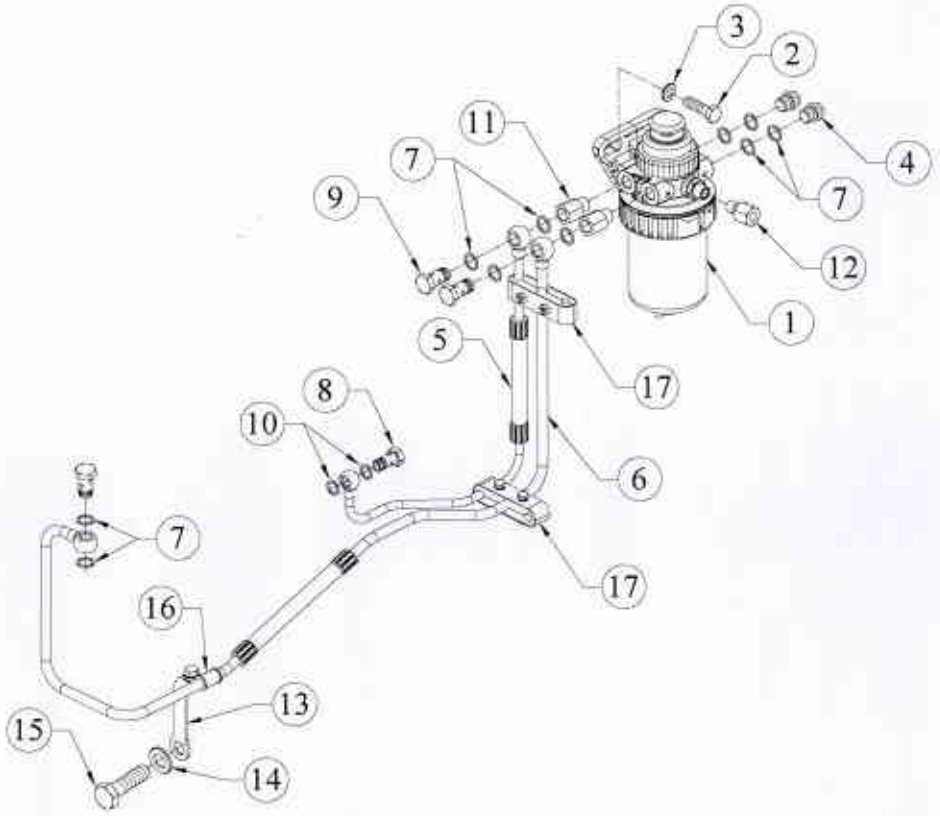

SR.NO.	PART NO.	DESCRIPTION	QTY.	REMARKS
13	6H.081.14.0.PR	CLAMP ON CR. CASE (FOR FUEL PIPE)	1	
14	50.506.14.000.	PLAIN MACHINED WASHER - M14	1	
15	50.003.14.025.	SET SCREW - M14X2X25 - 8.8	1	
16	6H.1097.43.0.PR	CLAMP ASSLY FOR LEAK OFF PIPE (SINGLE GROOVE)-6K1080 4 VALVE	1	
17	6H.1097.41.0.PR	LEAK OFF PIPE CLAMP ASSLY (3 GROOVE WITH 33MM CRS)	2	

TITLE: - LUB OIL PUMP (4K ENGINE)	GROUP: - 4H.1944

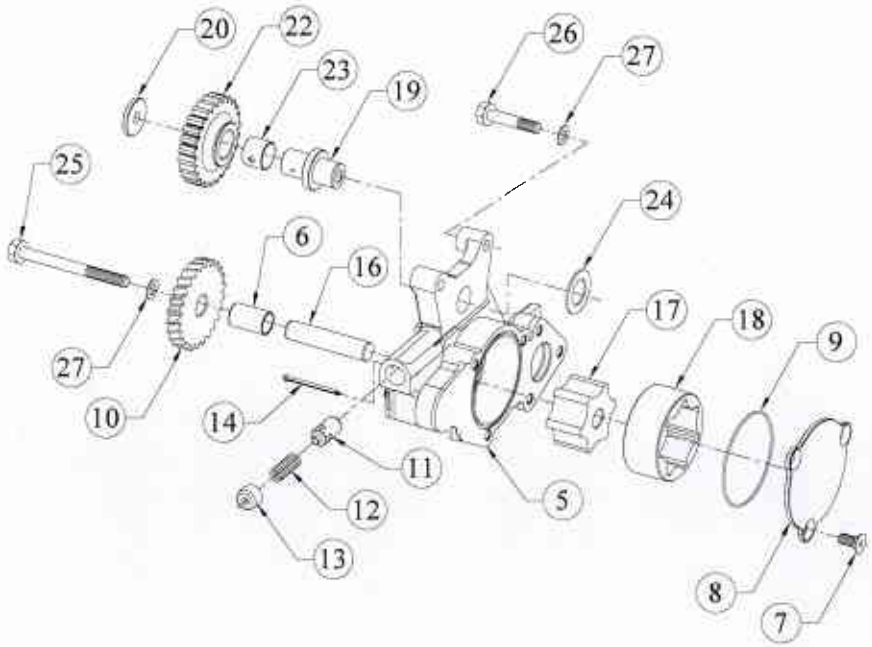

SR.NO.	PART NO.	DESCRIPTION	QTY.	REMARKS
*1	4H.1944.40.0.00	LUB OIL PUMP ASSEMBLY	1	CONSISTING OF SR. NO.2, 19 TO 21 & 24
*2	4H.1944.30.0.00	LUB OIL PUMP ASSLY (4K ENGINE)	1	CONSISTING OF SR. NO. 3, 15 & 18
*3	6H.985.90.0.00	LUB OIL PUMP ASSEMBLY WITHOUT ROTORS	1	CONSISTING OF SR. NO. 4 & 7 TO 14
*4	6H.985.20.0.00	SUB ASSEMBLY OF LOP BODY AND BUSH	1	CONSISTING OF SR. NO. 5,6
5	6H.985.01.0.00	LUB OIL PUMP BODY	1	NOT SUPPLIED LOOSE
6	LP.553.576.0.001	KIR 6K1080 TA 6H985080 (LAXMI UDYOG) OIL PUMP BUSH, STD PF	1	NOT SUPPLIED LOOSE
7	06.010.01.0.00	COUNTER SUNK SOCKET HEAD SCREW.	3	
8	6H.985.05.0.00	COVER PLATE	1	NOT SUPPLIED LOOSE
9	6H.985.06.0.00	O RING	1	

TITLE: - LUB OIL PUMP (4K ENGINE)	GROUP: - 4H.1944

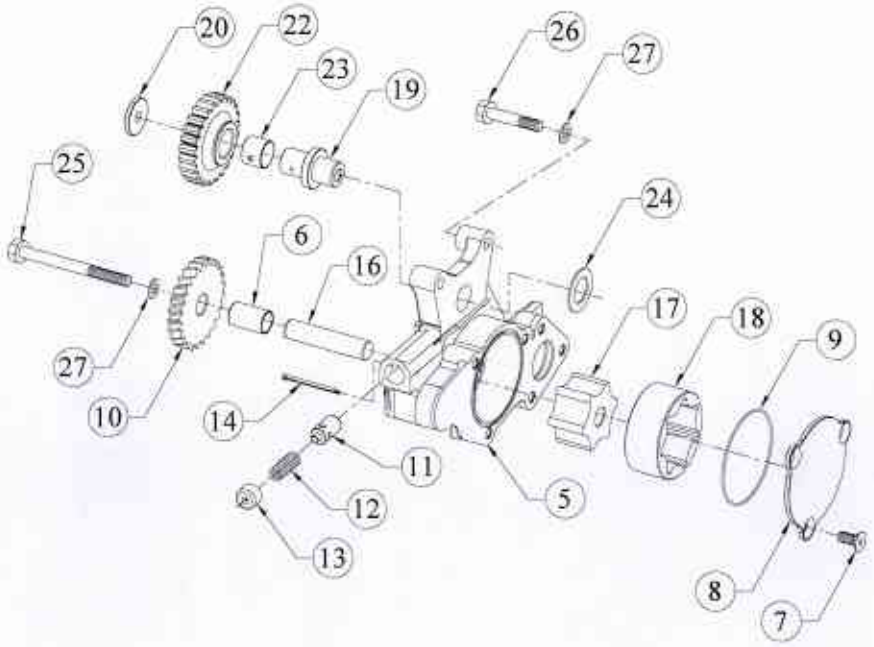

SR.NO.	PART NO.	DESCRIPTION	QTY.	REMARKS
10	3H.005.04.0.00	LUB.OIL PUMP DRIVING GEAR(FINISH)	1	
11	03.010.13.0.00	RELIEF VALVE	1	
12	03.010.26.0.00	SPRING (FOR RELIEF VALVE)	1	
13	03.010.15.0.00	CUP FOR SPRING	1	
14	50.036.07.010.	SPLIT COTTER PIN - 1/8"X1-1/2"	1	
*15	6H.985.10.0.00	ROTOR SUB ASSEMBLY	1	CONSISTING OF SR. NO. 16,17
16	6H.985.02.0.00	SHAFT FOR INNER ROTOR	1	NOT SUPPLIED LOOSE
17	6H.985.03.0.00	INNER ROTOR	1	NOT SUPPLIED LOOSE
18	6H.985.04.0.00	OUTER ROTOR	1	NOT SUPPLIED LOOSE
19	6H.985.07.0.00	SHAFT FOR LOP INTERMEDIATE GEAR	1	
20	4H.372.02.0.00	HARD WASHER (FOR INT. GEAR)	1	

TITLE: - LUB OIL PUMP (4K ENGINE)	**GROUP: -** 4H.1944

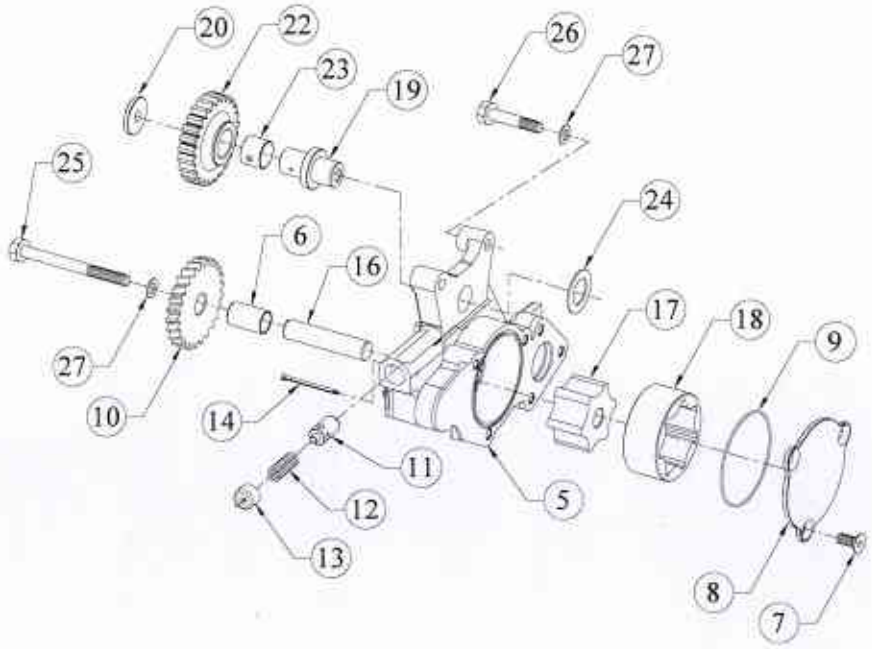

SR.NO.	PART NO.	DESCRIPTION	QTY.	REMARKS
*21	3H.005.30.0.00	SUB.ASSLY.OF L.O.PUMP INT.GEAR AND BUSH.	1	CONSISTING OF SR. NO. 22,23
22	3H.005.03.0.00	INTERMEDIATE GEAR(FOR L.O.PUMP)(FINISH)	1	
23	34.014.12.0.00	BUSH FOR LEVER	1	
24	02.024.38.0.00	WASHER(ROCKER LEVER)	1	
25	50.002.08.075.	SET BOLT - M8X1.25X75 - 8.8	1	
26	50.002.08.035.	SET BOLT - M8X1.25X35 - 8.8	2	
27	50.506.08.000.	PLAIN MACHINED WASHER - M8	3	

TITLE: - GAS OUTLET MANIFOLD & SUPPORT

GROUP: - 4H.1951

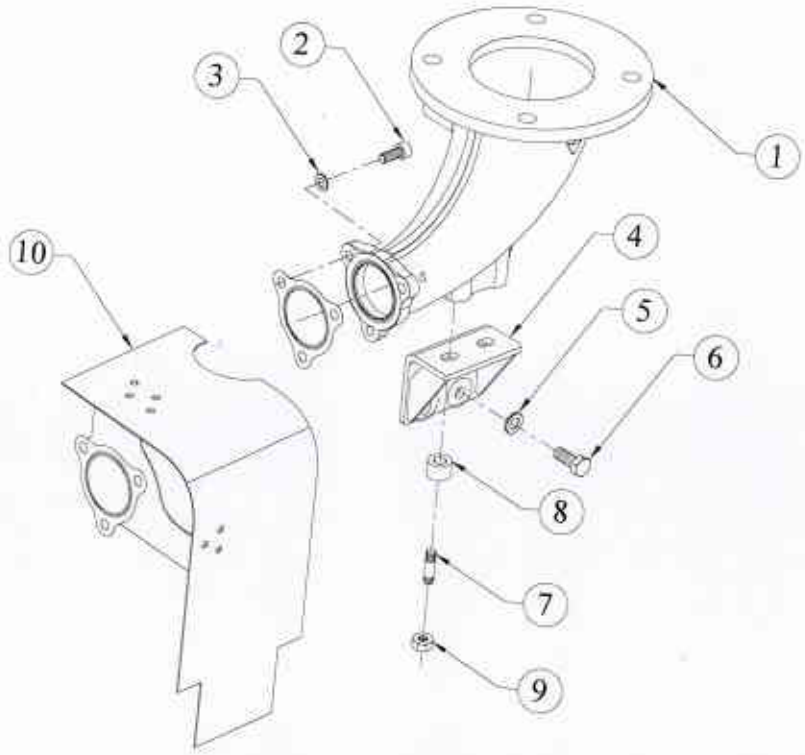

SR.NO.	PART NO.	DESCRIPTION	QTY.	REMARKS
1	4H.1951.01.0.PR	EXHAUST DIFFUSER	1	
2	T4.122.34.0.PR	SOCKET HEAD BOLT (M8X22)	3	
3	50.506.08.000	PLAIN MACHINED WASHER - M8	3	
4	4H.1951.03.0.PR	BRACKET FOR DIFFUSER	1	
5	50.506.10.000	PLAIN MACHINED WASHER - M10	2	
6	50.003.10.020	SET SCREW - M10X1.5X20 - 8.8	2	
7	T4.122.33.0.PR	STUD (M10 X 30)	2	
8	04.028.02.0.00	SPACER (11X20X13.8L)	2	
9	T4.122.41.0.PR	NUT - M10X1.5 - GRADE 10	2	
10	4H.1951.04.0.PR	HEAT SHIELD (INTEGRAL WITH DIFFUSER JOINT)	1	

TITLE: - LIFTING HOOK (4K1080 4 VALVE, CPCB II)	**GROUP: -** 4H.1952

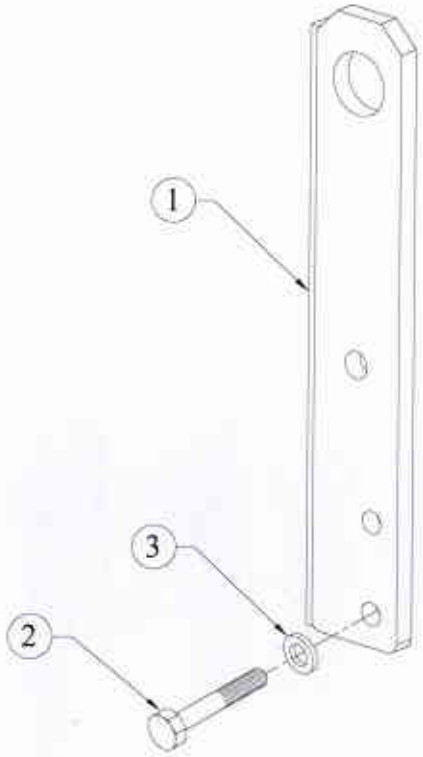

SR.NO.	PART NO.	DESCRIPTION	QTY.	REMARKS
1	4H.1952.05.0.PR	LIFTING HOOK (4K1080 4 VALVE) CPCB II	2	
2	50.002.10.030.	SET BOLT - M10X1.5X30 - 8.8	2	
3	50.506.10.000.	PLAIN MACHINED WASHER - M10	2	

TITLE: - FLANGE AND FASTENERS FOR TAIL PIPE	GROUP: - 4H.21PK.03

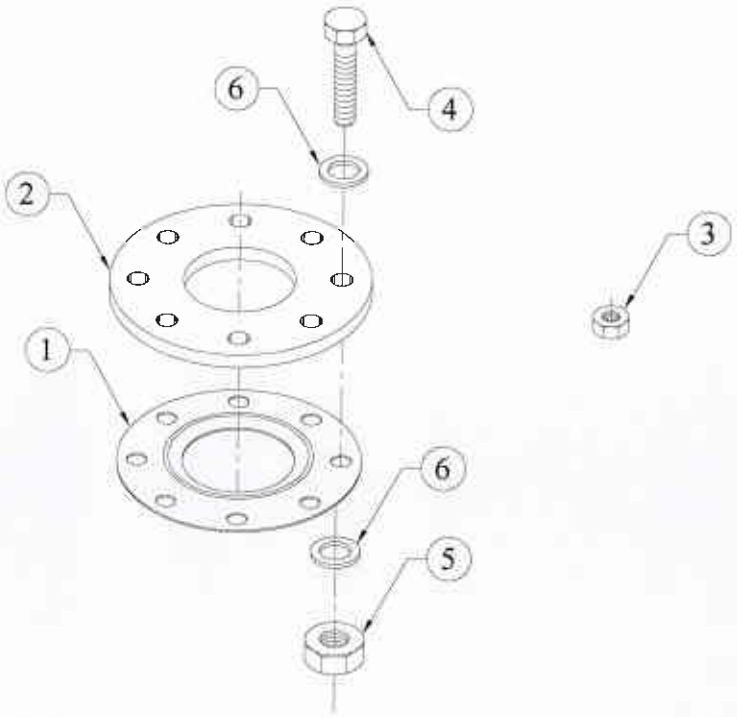

SR.NO.	PART NO.	DESCRIPTION	QTY.	REMARKS
1	6H.352.02.0.00	JOINT FOR EXHAUST SILENCER	1	
2	6H.352.03.0.00	FLANGE (AT SILENCER INLET AND OUTLET) FOR 6R1080T AND 6R1080TA SILENT SET	1	
3	50.006.10.000.	NUT - M10X1.5 - GR.8	4	
4	50.003.16.050.	SET SCREW - M16X2X50 - 8.8	8	
5	50.006.16.000.	NUT - M16X2 - GR.8.8	8	
6	50.548.16.000.	WASHER	16	

TITLE: - CAC PIPE (4K1080 4V)	**GROUP: -** 4H.224.12

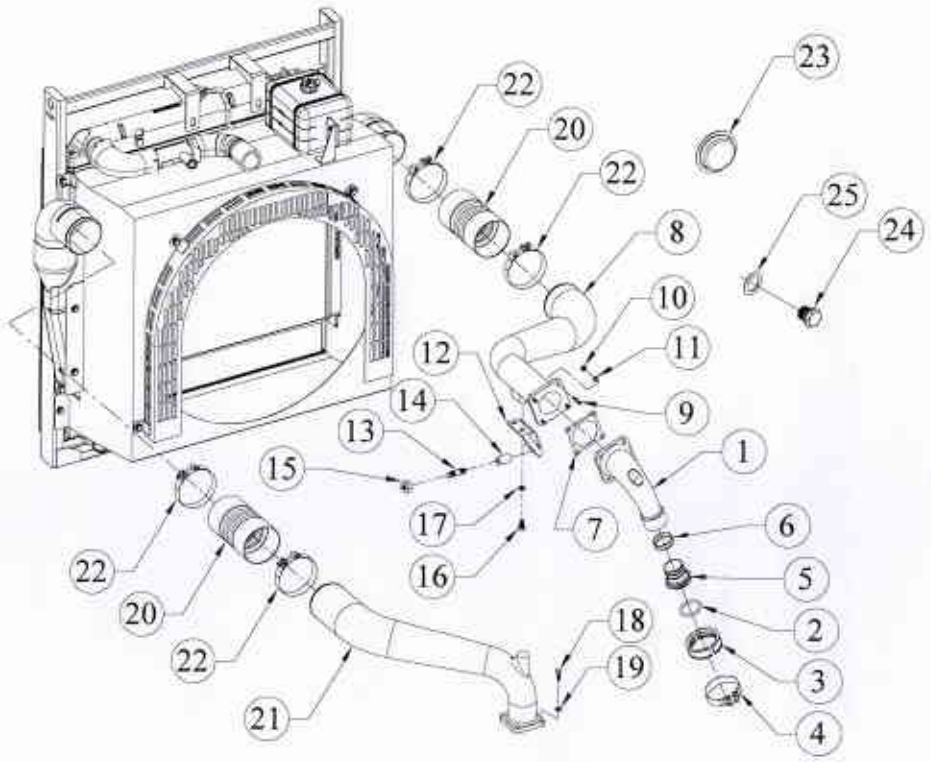

SR.NO.	PART NO.	DESCRIPTION	QTY.	REMARKS
1	4H.224.14.0.PR	AIR DELIVERY BEND (4K1080 4V)	1	
2	F6.889.05.0.00	O'RING (FOR K27 TURBO OUTLET)	1	
3	F6.377.04.0.00	V BEND CLAMP	2	
4	F6.377.16.0.00	JUPITER T -BOLT CLAMP S/F 83MM O.D	1	
5	4H.224.15.0.PR	SPACER (BETWEEN TURBO & AIR PIPE)(4K1080 4V)	1	
6	4H.224.16.0.PR	O-RING (FOR SPACER BETWEEN TURBO & AIR PIPE)(4K1080 4V)	2	
7	6H.058.02.0.00	JOINT FOR AIR PIPE	1	
8	4H.1712.28.0.PR	AIR PIPE (iRADIATOR TO BEND PIPE) FOR CPCB II	1	
9	50.010.08.025	STUD - M8X1.25X025 - 8.8	4	
10	50.006.08.000	NUT- M8X1.25 - GR.8	4	
11	50.506.08.000	PLAIN MACHINED WASHER - M8	9	
12	4H.1712.29.0.PR	BRACKET FOR CAC PIPE (FOR CPCB II)	1	
13	14.122.27.0.PR	STUD (M10X60)	2	

TITLE: - CAC PIPE (4K1080 4V)	**GROUP: -** 4H.224.12

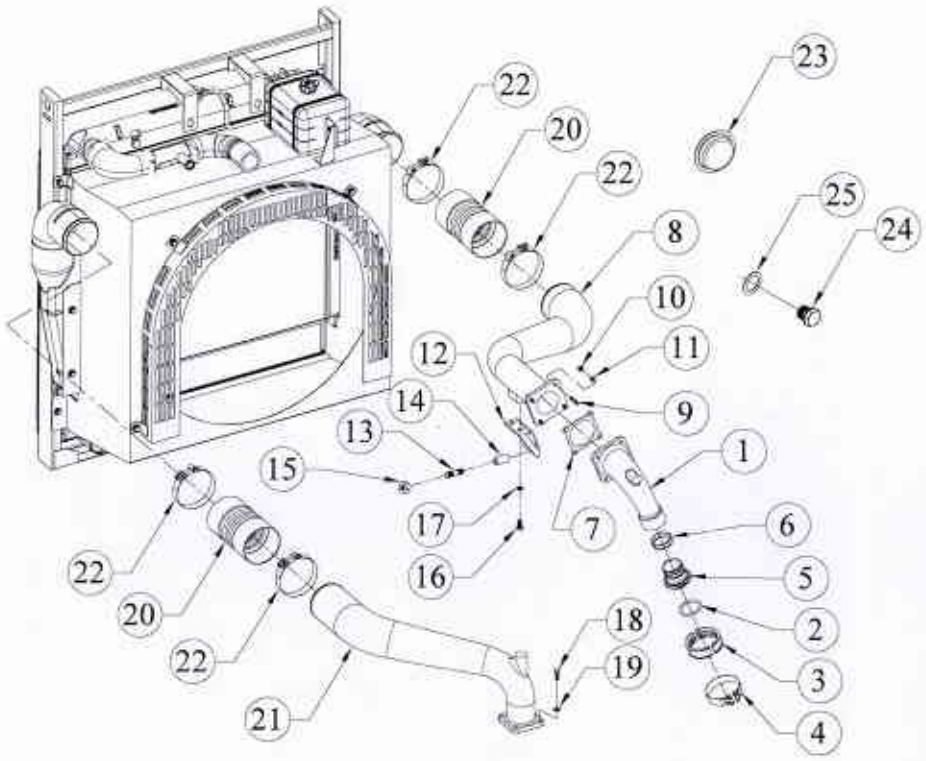

SR.NO.	PART NO.	DESCRIPTION	QTY.	REMARKS
14	F6.026.04.0.00	SPACER SLEEVE.	2	
15	DV0.024.18.0.00	SPECIAL NUT FOR EXHAUST MANIFOLD	2	
16	50.003.10.025	SET SCREW - M10X1.5X25 - 8.8	2	
17	50.548.10.000	SPECIAL PLAIN WASHER - M10	4	
18	50.003.08.030	SET SCREW - M8X1.25X30 - 8.8	4	
19	34.017.05.0.00	WASHER FOR FUEL PUMP GEAR.	4	
20	4H.1712.18.0.00	HOSE FOR AIR PIPE FROM TC TO CAC	2	
21	4H.224.17.0.PR	AIR PIPE (CAC TO AIR INLET)(4K1080 4V)	1	
22	F6.680.25.0.00	T-BOLT CLAMP JUPITER JT6A20 (100 - 108 DIA RANGE)	4	
23	4H.224.13.0.00	CAP FOR CAC PIPE	2	
24	50.610.22.000	CORE PLUG HEXAGONAL SOCKET HEAD(M22x1.5)	1	
25	50.508.23.000	COPPER WASHER (22X27)	1	

TITLE: - SUPPORT FOR CAC PIPE (STAGE 1)	**GROUP: -** 4H.224.13

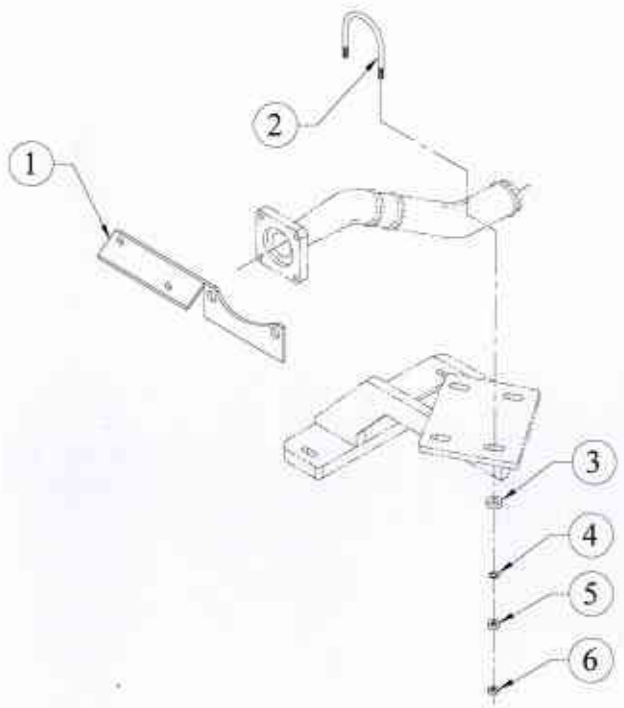

SR.NO.	PART NO.	DESCRIPTION	QTY.	REMARKS
1	4H.1712.36.0.PR	BRACKET (FOR CAC PIPE SUPPORT)	1	
2	4H.224.03.0.00	U CLAMP	1	
3	06.326.06.0.00	SPACER FOR LEVER	2	
4	50.548.08.000	SPL.PLAIN M/CED WASHER	2	
5	50.006.08.000	NUT- M8X1.25 - GR.8	2	
6	50.008.08.000	LOCK NUT - M8X1.25 - GR.8	2	

TITLE: - SUPPORT FOR CAC PIPE (STAGE 2)	**GROUP:** - 4H.224.14

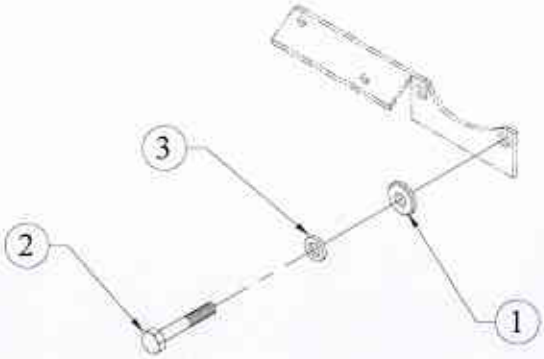

SR.NO.	PART NO.	DESCRIPTION	QTY.	REMARKS
1	50.548.14.000	SPL. PLAIN WASHER - M14	2	
2	50.002.14.065	SET BOLT - M14X2X65 - 8.8	2	
3	50.506.14.000	PLAIN MACHINED WASHER - M14	4	

TITLE: - ENGINE MOUNTING FOOT AND FASTENERS	**GROUP: -** 4H.228.14

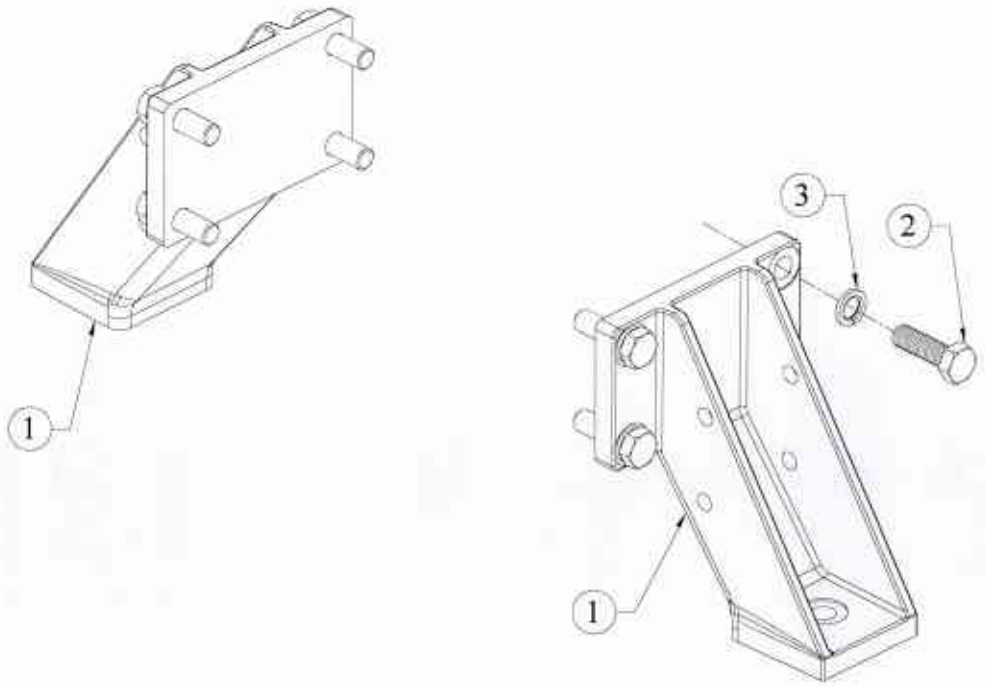

SR.NO.	PART NO.	DESCRIPTION	QTY.	REMARKS
1	4H.228.09.0.00	ENGINE MTG. FOOT (205 HT)	2	
2	50.003.14.045.	SET SCREW - M14X2X45 - 8.8	8	
3	50.505.14.000.	SPRING WASHER - M14	8	

TITLE: - ENGINE MTG.FOOT (FLYWHEEL SIDE)	GROUP: - 4H.228.6

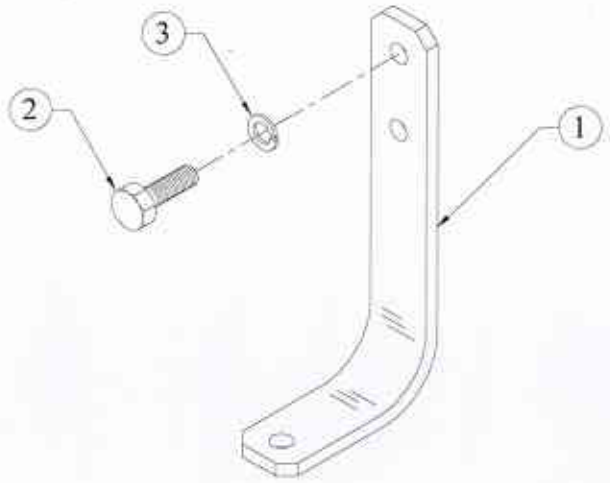

SR.NO.	PART NO.	DESCRIPTION	QTY.	REMARKS
1	4H.228.07.0.00	ENGINE FOOT(PACKING PURPOSE)	2	
2	50.003.14.035.	SET SCREW - M14X2X35 - 8.8	4	
3	50.505.14.000.	SPRING WASHER - M14	4	

TITLE: - INTERMEDIATE GEAR AND SUPPORT	GROUP: - 4H.237.3

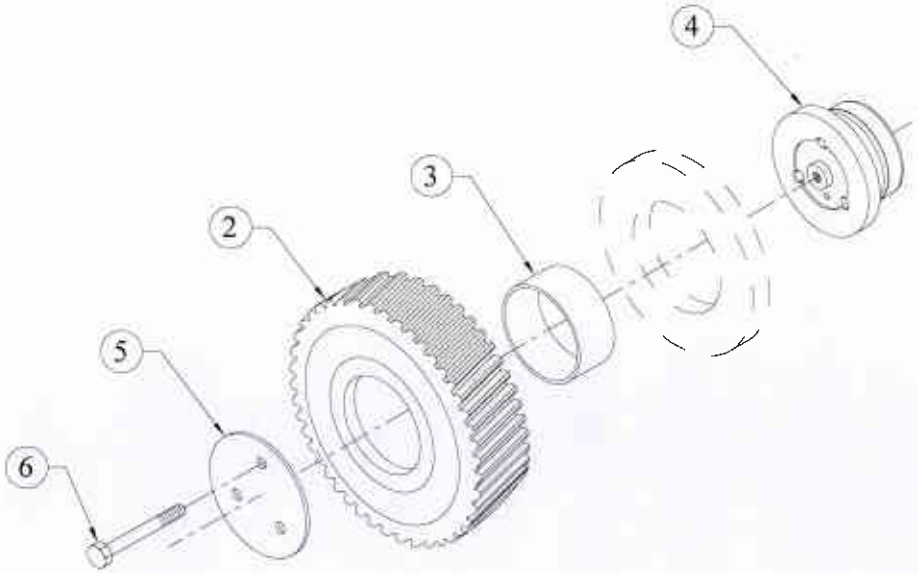

SR.NO.	PART NO.	DESCRIPTION	QTY.	REMARKS
*1	2H.038.10.0.00	ASSLY OF INTERMEDIATE GEAR & BUSH	1	CONSISTING OF SR. NO. 2, 3
2	2H.038.03.0.00	INTERMEDIATE GEAR(FINISH)	1	NOT SUPPLIED LOOSE
3	2H.004.02.9.00	BUSH FOR INTERMEDIATE GEAR(S/F)	1	
4	4H.237.02.0.00	INTERMEDIATE GEAR SUPPORT(SUITABLE FOR COMMON GEAR CASING)	1	
5	2H.004.04.0.00	RETAINING PLATE (FOR INT.GEAR)	1	
6	50.002.08.070.	SET BOLT - M8X1.25X70 - 8.8	3	

TITLE: - SET OF STICKERS	**GROUP: -** 4H.23PM.01

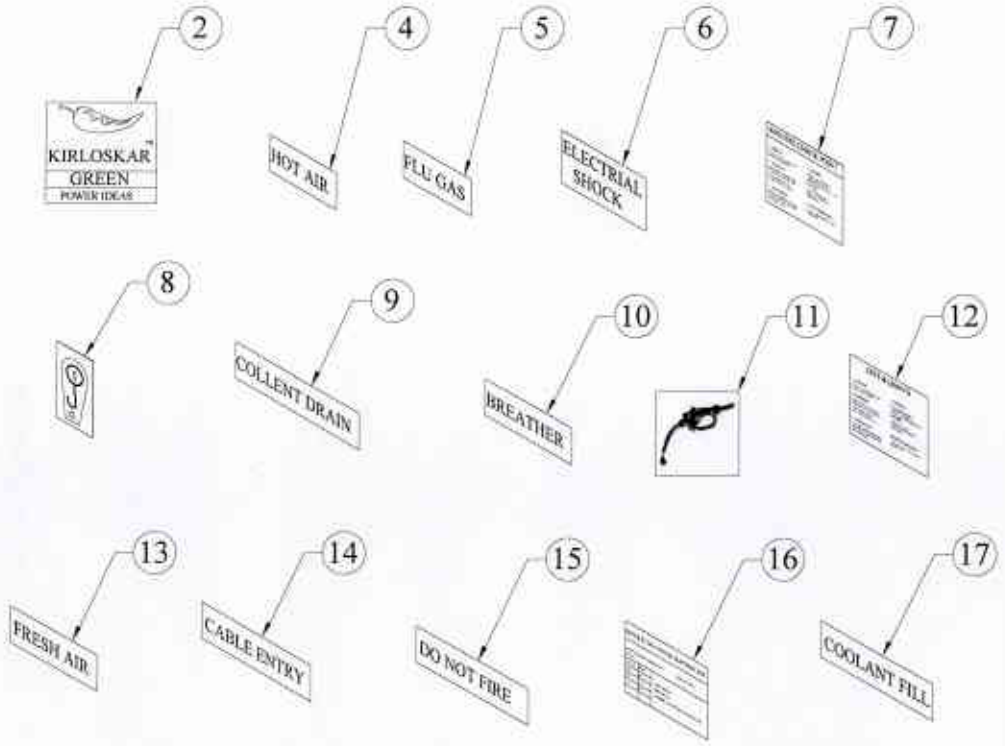

SR.NO.	PART NO.	DESCRIPTION	QTY.	REMARKS
*1	2H.181.20.0.00	SET OF STICKERS FOR WATER COOLED ENGINES (ABOVE 30 KVA - 4R/6R/6K)	1	CONSISTING OF SR. NO. 2 TO 32
2	2H.075.18.0.00	KGPI LOGO FOR CANOPY "B"	3	
3	2H.075.14.0.00	KGPI LOGO GREEN BAND	2	
4	2H.181.03.0.00	HOT AIR (STICKER WORD)	1	
5	2H.181.04.0.00	FLU GAS (STICKER WORD)	1	
6	2H.181.05.0.00	ELECTRICAL SHOCK (STICKER WORD)	1	
7	2H.181.06.0.00	STICKER FOR "ROUTINE CHECK POINT"	1	
8	2H.181.07.0.00	STICKER FOR "LIFTING HOOK"	4	
9	2H.181.08.0.00	STICKER FOR "COOLANT DRAIN"	1	
10	2H.181.09.0.00	STICKER FOR "BREATHER"	1	
11	2H.181.11.0.00	STICKER FOR "DIESEL FILLING"	1	
12	2H.181.12.0.00	STICKER FOR "DO'S AND DON'T'S"	1	
13	2H.181.13.0.00	STICKER FOR "FRESH AIR"	1	
14	2H.181.15.0.00	STICKER FOR "CABLE ENTRY"	1	

TITLE: - SET OF STICKERS	**GROUP: -** 4H.23PM.01

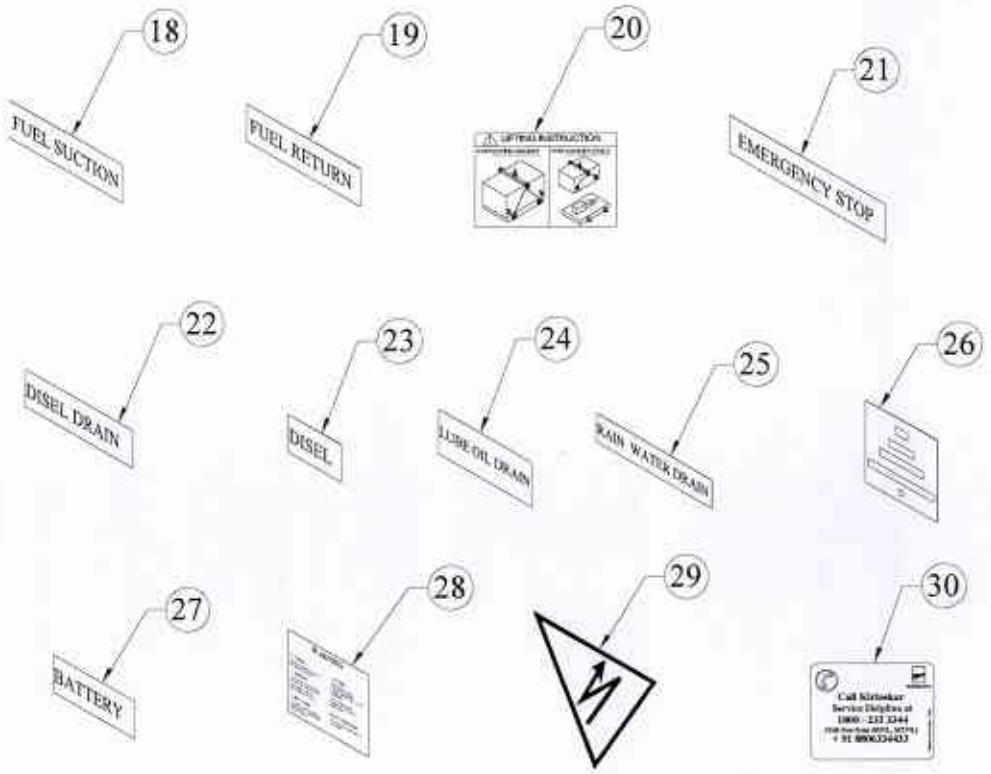

SR.NO.	PART NO.	DESCRIPTION	QTY.	REMARKS
15	2H.181.17.0.00	STICKER FOR "DO NOT FIRE"	1	
16	2H.181.18.0.00	STICKER FOR "SPECIFIC GRAVITY"	1	
17	2H.181.19.0.00	STICKER FOR "COOLANT FILL"	1	
18	2H.181.22.0.00	FUEL SUCTION (STICKER WORD)	1	
19	2H.181.23.0.00	FUEL RETURN (STICKER WORD)	1	
20	2H.181.24.0.00	STICKER FOR LIFTING INSTRUCTION	1	
21	38.065.04.0.00	STICKER FOR "EMERGENCY STOP"	1	
22	38.065.05.0.00	STICKER FOR "DIESEL DRAIN"	1	
23	38.065.06.0.00	STICKER FOR "DIESEL"	1	
24	38.065.08.0.00	STICKER FOR "LUB OIL DRAIN"	1	
25	38.065.09.0.00	STICKER FOR "WATER DRAIN"	1	
26	38.065.13.0.00	STICKER FOR "EARTHING"	1	
27	38.065.70.0.00	STICKER FOR "BATTERY"	1	
28	38.065.71.0.00	WARNING STICKER	1	
29	38.065.74.0.00	DANGER STICKER	1	
30	2H.075.08.0.00	TOLL FREE STICKER	1	

TITLE: - ENGINE WIRING HARNESS	**GROUP: -** 4H.27PM.02

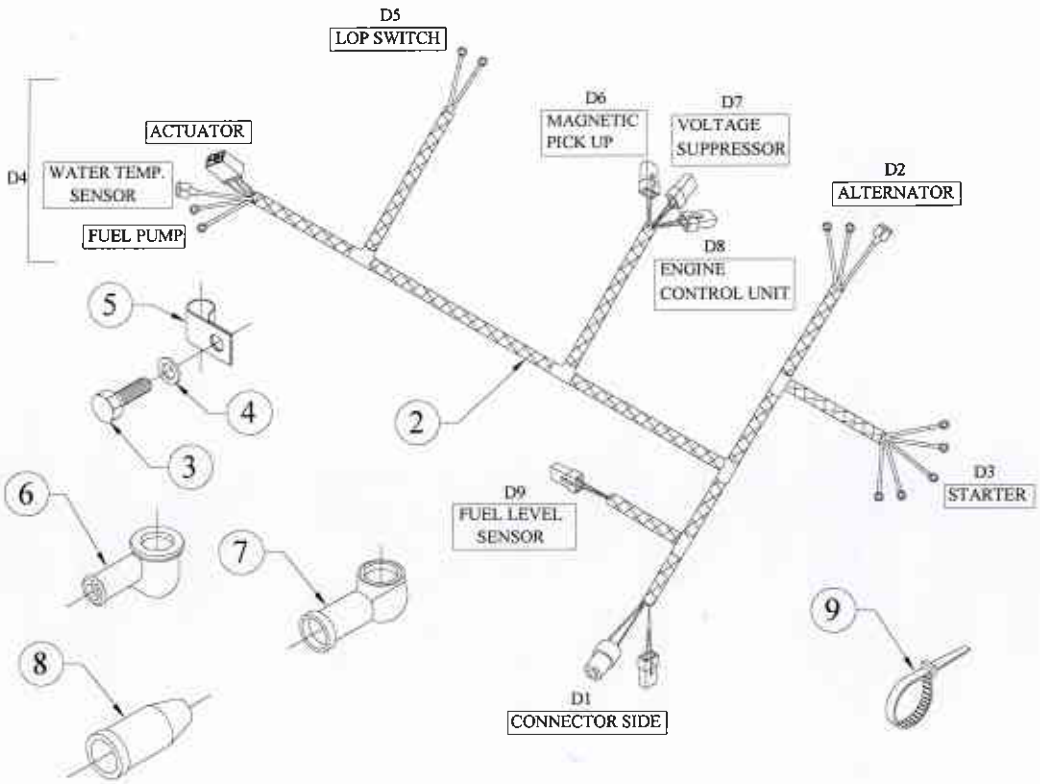

SR.NO.	PART NO.	DESCRIPTION	QTY.	REMARKS
*1	4H.1464.3..	ENGINE WIRING HARNESS WITH 4PIN &15 PIN CONNECTOR & SEDEMAC GOVERNER FOR 4K ENGINE	1	CONSISTING OF SR. NO. 2 TO 9
2	4H.1464.40.0.PR	ENGINE WIRING HARNESS ASSEMBLY WITH 4PIN &15 PIN CONNECTOR & SEDEMAC GOVERNER FOR CPCB II 4K ENGINE	1	
3	50.003.08.025.	SET SCREW - M8X1.25X25 - 8.8	3	
4	50.506.08.000.	PLAIN MACHINED WASHER - M8	5	
5	34.151.03.0.00	CLIP FOR FLEXIBLE PIPE WITH SLEEVE	6	
6	22.118.01.0.00	RUBBER SLEEVE(12DIA)	1	
7	24.083.01.0.00	RUBBER SLEEVE (20DIA)	3	
8	3H.905.05.0.00	RUBBER SLEEVE FOR TEMP.SWITCH / SENSOR	1	
9	3H.905.07.0.00	TIE WRAP 200 MM LENGTH	3	

TITLE: - EXHAUST SILENCER FOR 125KVA	**GROUP: -** 4H.792.40

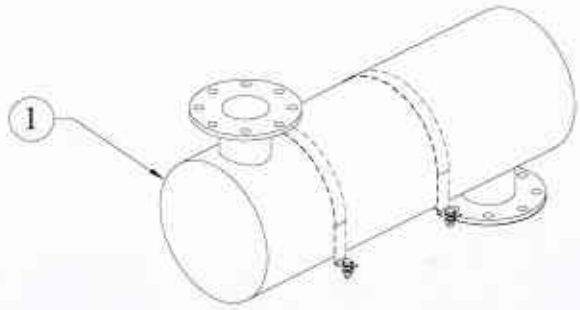

SR.NO.	PART NO.	DESCRIPTION	QTY.	REMARKS
1	4H.792.40.0.PR	EXHAUST SILENCER FOR 125KVA	1	

TITLE: - LUB OIL COOLER & SPIN ON TYPE FILTER	**GROUP: -** 6H.014

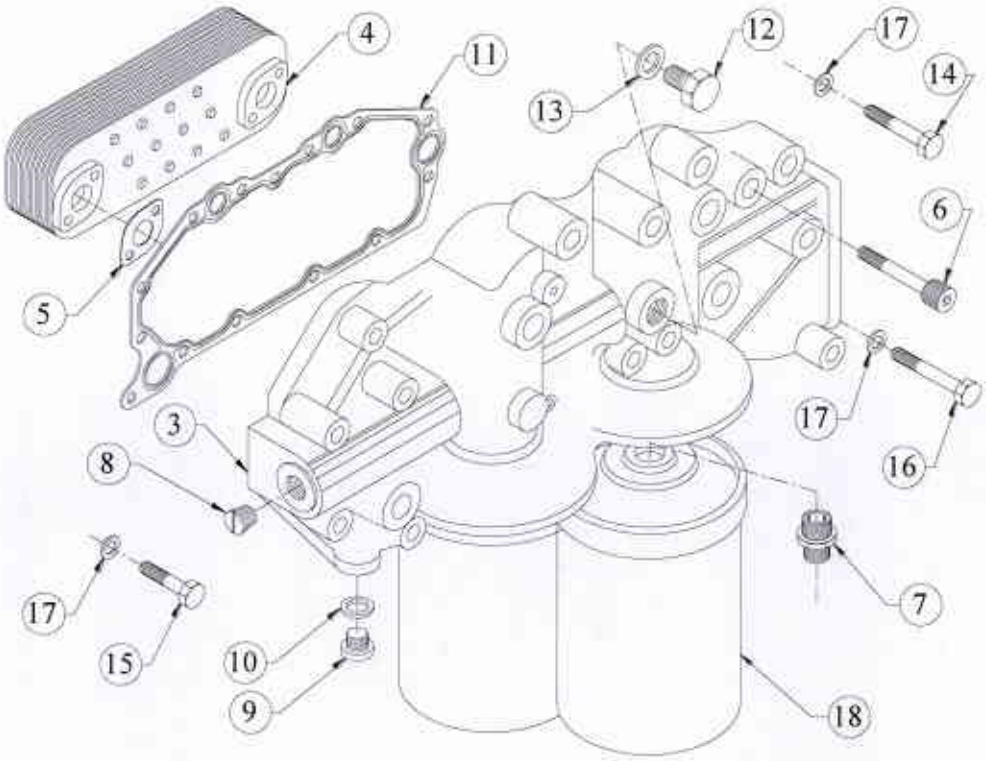

SR.NO.	PART NO.	DESCRIPTION	QTY.	REMARKS
*1	6H.014.10.0.00	LUB OIL COOLER ASSLY.	1	CONSISTING OF SR. NO. 2 & 11 TO 17
*2	6H.014.20.0.00	HEADER & COOLER ASSLY.	1	CONSISTING OF SR. NO. 3 TO 10
3	6H.014.03.0.00	HEADER(FOR L.O.COOLER & SPIN ON FILTER)	1	
4	F6.358.01.0.00	PLATE TYPE LUB OIL COOLER	1	
5	F6.036.11.0.00	JOINT FOR LUB OIL COOLER	2	
6	50.011.10.040.	CAP SCREW	4	
7	3H.007.05.0.00	ADAPTOR FOR SPIN ON FILTER	2	
8	50.056.07.000.	HEADLESS PIPE PLUG (NPTF 14-3/4")	1	
9	50.610.22.000.	CORE PLUG HEXAGONAL SOCKET HEAD(M22x1.5)	1	
10	50.508.23.000.	COPPER WASHER (22X27)	1	
11	6H.014.11.0.00	JOINT FOR HEADER	1	

TITLE: - LUB OIL COOLER & SPIN ON TYPE FILTER	**GROUP: -** 6H.014

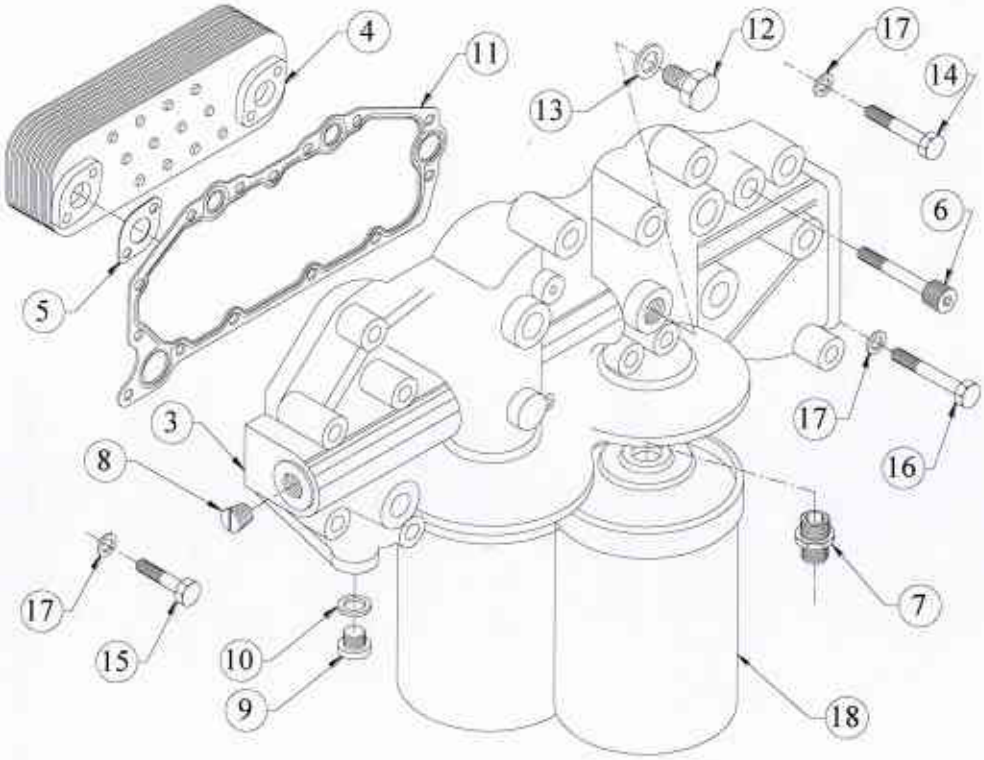

SR.NO.	PART NO.	DESCRIPTION	QTY.	REMARKS
12	34.001.35.0.00	PRECOATED PLUG (FOR OIL GALLERY)	1	
13	50.508.08.000.	COPPER WASHER (10X16)	1	
14	50.002.08.060.	SET BOLT - M8X1.25X60 - 8.8	2	
15	50.002.08.090.	SET BOLT - M8X1.25X90 - 8.8	4	
16	50.002.08.110.	SET BOLT - M8X1.25X110 - 8.8	1	
17	50.506.08.000.	PLAIN MACHINED WASHER - M8	14	
18	06.436.01.0.00	SPIN ON FILTER FOR LUBRICATING OIL	2	

TITLE: -FAN DRIVE ARRANGEMENT	GROUP: - 6H.031.6

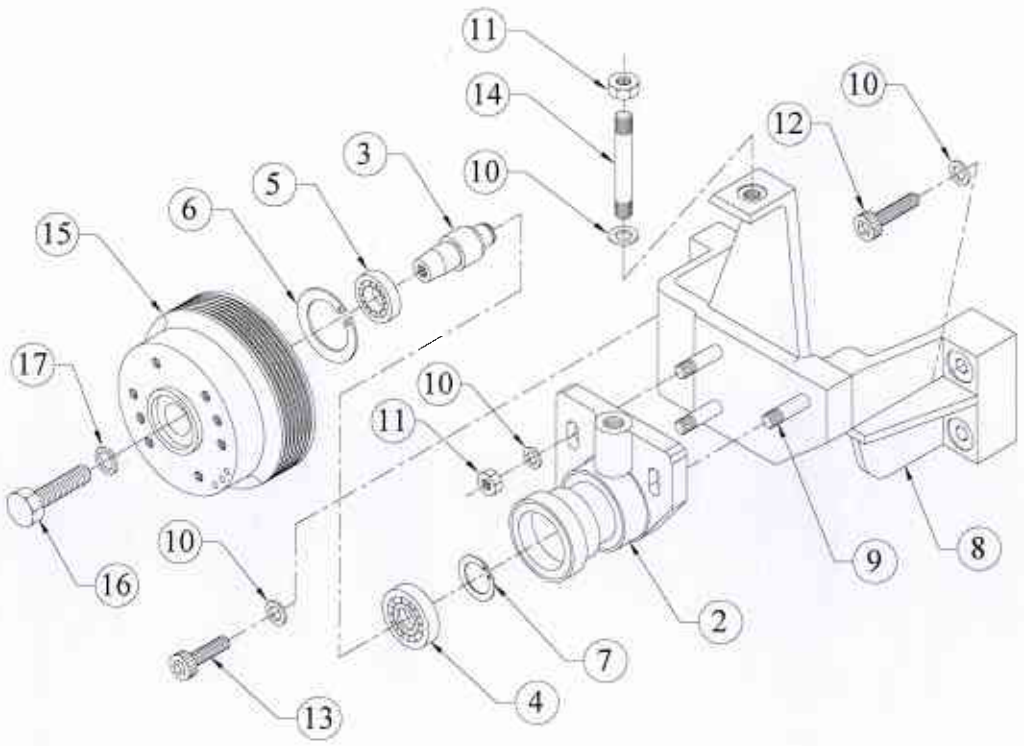

SR.NO.	PART NO.	DESCRIPTION	QTY.	REMARKS
*1	6H.031.10.0.00	SUB ASSEMBLY OF BEARING HOUSING	1	CONSISTING OF SR. NO. 2 TO 7
2	6H.031.02.0.00	HOUSING FOR SHAFT (FINISH)	1	
3	6H.031.04.0.00	SHAFT FOR FAN PULLEY	1	
4	F6.017.21.0.00	BALL BEARING(DIN 625-6306-2RS1)	1	
5	F6.017.22.0.00	BALL BEARING(DIN 625 6305-2RS1)	1	
6	50.502.72.000	CIRCLIP INTERNAL - 72 MM	1	
7	50.501.25.000	CIRCLIP EXTERNAL - 25 MM	1	
8	6H.031.01.0.00	BRACKET (FINISH)	1	
9	50.010.10.025	STUD - M10X1.5X25 - 8.8	3	
10	50.506.10.000	PLAIN MACHINED WASHER - M10	8	
11	50.006.10.000	NUT - M10X1.5 - GR.8	4	
12	50.011.10.050	SOCKET HEAD SCREW - M10X1.5X50 - 8.8	2	
13	50.011.10.040	CAP SCREW	2	
14	50.010.10.060	STUD - M10X1.5X60 - 8.8	1	
15	6H.1130.09.0.00	FAN PULLEY (PCD 130) POLY 'V', 7 PK	1	

TITLE: -FAN DRIVE ARRANGEMENT	GROUP: - 6H.031.6

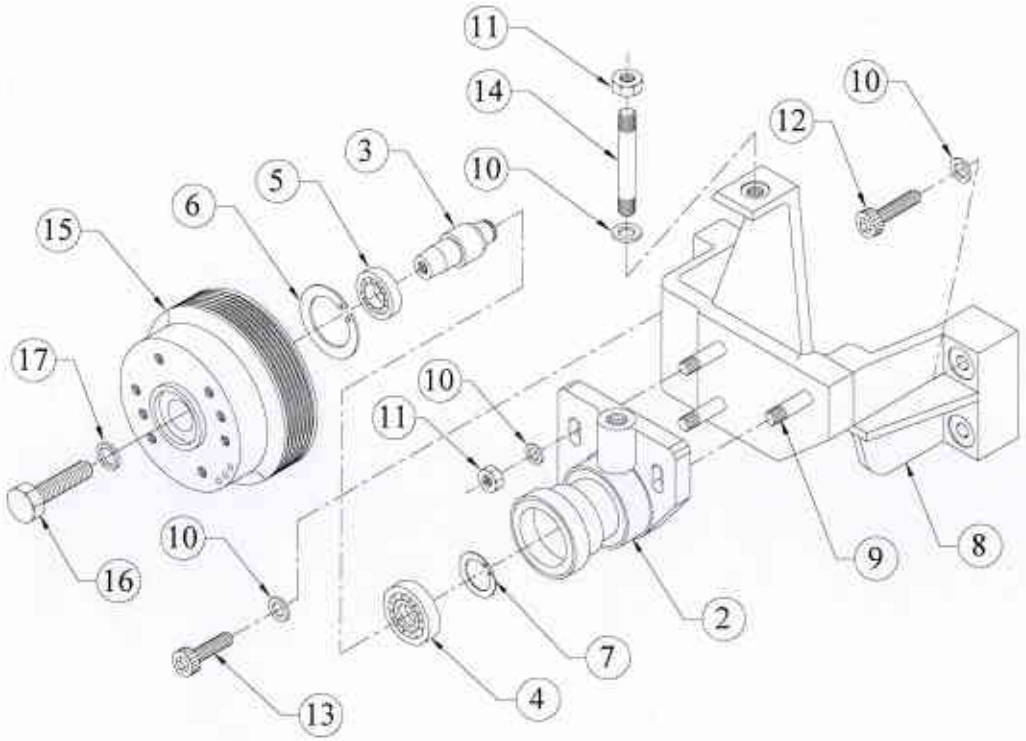

SR.NO.	PART NO.	DESCRIPTION	QTY.	REMARKS
16	50.051.12.050	SET SCREW M12 X 1.75 X 50 L 10.9 G	1	
17	6H.031.06.0.00	WASHER (FAN DRIVE PULLEY)	1	

TITLE: - OIL SEAL HOUSING (4K ENGINE)	**GROUP :-** 6H.045.1

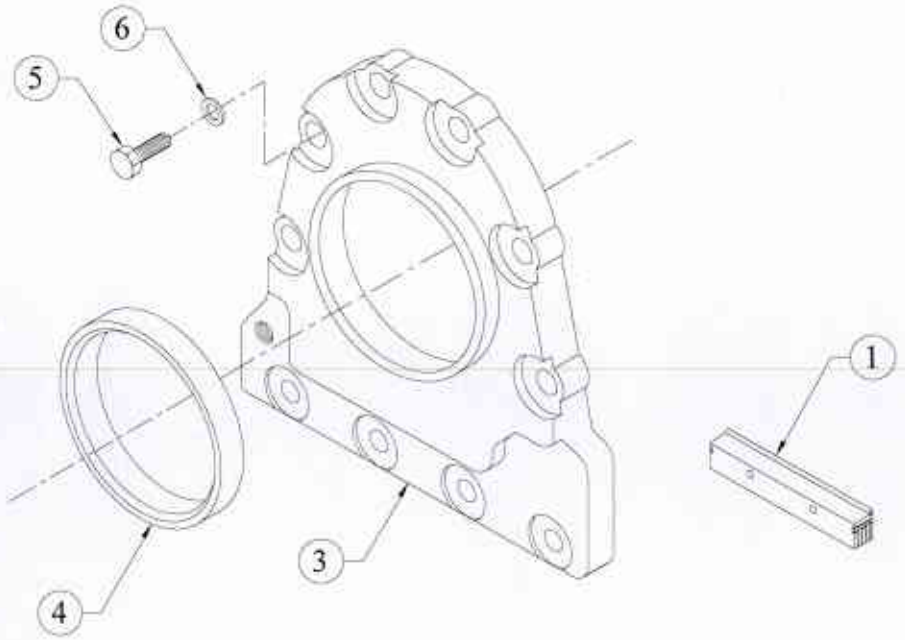

SR.NO.	PART NO.	DESCRIPTION	QTY.	REMARKS
1	2H.006.20.0.00	PLATE(WITH RUBBER MOULDING)	2	
*2	6H.045.10.0.00	SUB-ASSLY OF OIL SEAL HOUSING F.W.E.	1	CONSISTING OF SR. NO. 3, 4
3	6H.045.01.0.00	OIL SEAL HOUSING (FWE) FINISH	1	
4	03.007.06.0.00	OIL SEAL(115X140X16) CR MAKE	1	
5	50.003.08.020.	SET SCREW - M8X1.25X20 - 8.8	10	
6	50.506.08.000.	PLAIN MACHINED WASHER - M8	10	

TITLE: - CRANK PULLEY FOR 6PK BELT (4K-125 KVA)	**GROUP: -** 6H.1130.5

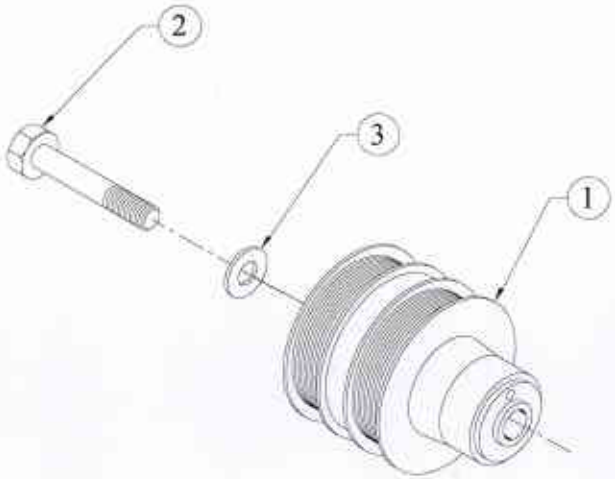

SR.NO.	PART NO.	DESCRIPTION	QTY.	REMARKS
1	6H.1130.08.0.00	CRANK PULLEY (PCD 140) POLY `V' , PK PROFILE	1	
2	03.016.02.0.00	CRANK PULLEY BOLT-UPDATED (110MM)	1	
3	03.016.03.0.00	WASHER (FOR CRANK PULLEY BOLT) - UPDATED	1	

TITLE: - POLY V BELT: 7PK FOR FAN DRIVE	**GROUP: -** 6H.1171.3

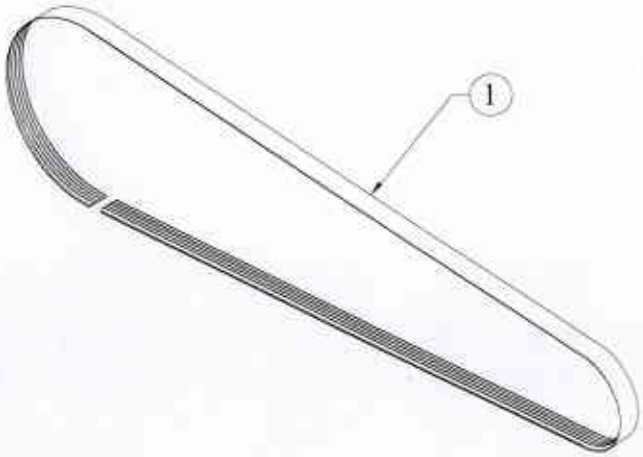

SR.NO.	PART NO.	DESCRIPTION	QTY.	REMARKS
1	6H.1171.01.0.00	POLY V BELT FOR 6R1080T/TA (7PK BELT)	1	

TITLE: - CONNECTING ROD	GROUP: - 6H.179

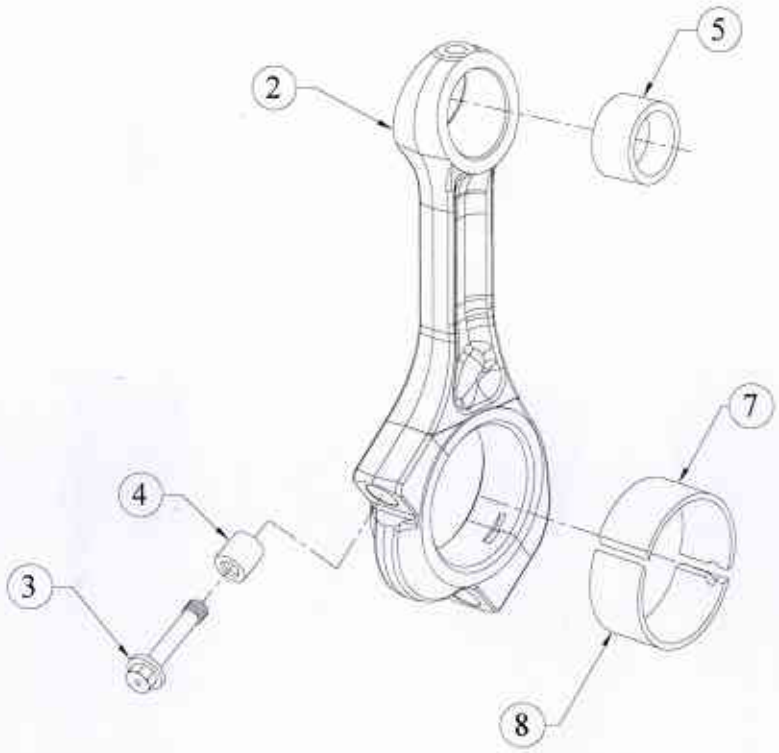

SR.NO.	PART NO.	DESCRIPTION	QTY.	REMARKS
*1	6H.179.20.0.00	CONNECTING ROD ASM WITH SMALL END BUSH	1	CONSISTING OF SR. NO 2 TO 5
2	6H.179.05.0.00	CONNECTING ROD	1	NOT SUPPLIED LOOSE
3	34.026.03.0.00	BOLT FOR CON.ROD	2	
4	34.026.02.0.00	DOWEL FOR CON.ROD	2	
5	6H.111.01.0.00	SMALL END BUSH FOR 6K1080 TA (160 KVA)	1	
*6	6H.179.04.0.00	LARGE END BEARING (PAIR)	1	CONSISTING OF SR. NO 7 & 8
7	6H.179.06.0.00	SPUTTER BEARING (KS MAKE) (CON ROD)	1	NOT SUPPLIED LOOSE
8	6H.179.03.0.00	LARGE END BEARING (BOTTOM)	1	NOT SUPPLIED LOOSE

TITLE: - K OIL PREMIUM 15 W 40 CI4	GROUP: - 82.110.16.1

SR.NO.	PART NO.	DESCRIPTION	QTY.	REMARKS
1	82.110.16.1.00	K OIL PREMIUM 15 W 40 CI4	17	NOT ILLUSTRATED

TITLE: -SET OF JOINTS, COPPER WASHERS & 'O' RINGS (4H.7902)	GROUP: -

SR.NO.	PART NO.	DESCRIPTION	QTY.	REMARKS
***1**	**4H.1806.71.0.00**	**SET OF JOINTS**		CONSITING OF SR.NO. 2 TO 23
*2	08.021.02.0.00	JOINT FOR FEED PUMP	1	
*3	2H.013.11.0.00	JOINT FOR DELIVERY BODY	1	
*4	4H.052.11.0.00	JOINT FOR BEARING HOUSING (282.5 CRS)	1	
*5	4H.052.12.0.00	JOINT FOR DELIVERY VOLUTE	1	
*6	4H.053.08.0.00	JOINT FOR THERMOSTAT COVER (METTALIC)	1	
*7	4H.1190.03.0.00	JOINT FOR FUEL PUMP GEAR COVER	1	
*8	4H.132.31.0.00	JOINT FOR ADAPTOR CRANKCASE SIDE	1	
*9	4H.1437.01.0.00	JOINT (FOR TURBO)	1	
*10	4H.1437.02.0.00	JOINT FOR ADAPTOR	1	
*11	4H.1613.26.0.PR	CYLINDER HEAD GASKET COMMON FOR4R1040/4K1080) & (2V/4V) CONFIGURATION.	1	

TITLE: -SET OF JOINTS, COPPER WASHERS & 'O' RINGS (4H.7902)	GROUP: -

SR.NO.	PART NO.	DESCRIPTION	QTY.	REMARKS
*12	4H.1629.03.0.00	JOINT FOR AIR INLET MANIFOLD (4 VALVE DESIGN)	1	
*13	4H.1630.02.0.00	GASKET FOR EXHAUST MANIFOLD	4	
*14	4H.223.11.0.00	JOINT FOR AIR INLET PIPE (ARMSTRONG TS9013)	1	
*15	6H.014.11.0.00	JOINT FOR HEADER	1	
*16	6H.020.04.0.00	JOINT BETWEEN CRANKCASE AND GEAR CASING	1	
*17	6H.021.11.0.00	JOINT FOR CENTRIFUGAL FILTER ADAPTOR	1	
*18	6H.058.02.0.00	JOINT FOR AIR PIPE	1	
*19	6H.352.02.0.00	JOINT FOR EXHAUST SILENCER	3	
*20	6H.986.05.0.00	JOINT FOR SUCTION FLANGE	1	
*21	F6.024.75.0.00	JOINT FOR GLACIER FILTER	1	
*22	F6.036.11.0.00	JOINT FOR LUB OIL COOLER	2	
*23	F6.503.02.0.00	S.S.JOINT(4")	1	

TITLE: -SET OF JOINTS, COPPER WASHERS & 'O' RINGS (4H.7902)	GROUP: -

SR.NO.	PART NO.	DESCRIPTION	QTY.	REMARKS
***24**	**4H.1806.72.0.00**	**SET OF COPPER WASHERS**		CONSITING OF SR.NO. 25 TO 36
*25	4H.010.93.0.00	MICO COPPER WASHER FOR LEAK OFF PIPE (MICO NO. 2 916 710 603)	8	
*26	50.508.08.000.	COPPER WASHER (10X16)	1	
*27	50.508.09.000.	COPPER WASHER (12X16)	6	
*28	50.508.10.000.	COPPER WASHER (12X18)	2	
*29	50.508.11.000.	COPPER WASHER (14X18)	20	
*30	50.508.12.000.	COPPER WASHER (14X20)	14	
*31	50.508.14.000.	COPPER WASHER (16X22)	7	
*32	50.508.17.000.	COPPER WASHER (18X24)	3	
*33	50.508.18.000.	COPPER WASHER (20X24)	2	
*34	50.508.23.000.	COPPER WASHER (22X27)	2	
*35	50.508.27.000.	COPPER WASHER (24X29)	2	
*36	F6.040.01.0.00	SEALING WASHER (FOR OIL FILLING CAP)	1	

TITLE: -SET OF JOINTS, COPPER WASHERS & 'O' RINGS (4H.7902)	GROUP: -

SR.NO.	PART NO.	DESCRIPTION	QTY.	REMARKS
***37**	**4H.1806.73.0.00**	**SET OF 'O' RINGS**		CONSITING OF SR.NO.38 TO 49
*38	03.036.01.0.00	O RING - DIPSTICK (2X5,21515 OR 21511)	1	
*39	2H.008.07.0.00	O RING (FOR CYL.LINER)	8	
*40	2H.008.11.0.00	O RING FOR CYLINDER LINER (VITON MATERIAL)	4	
*41	2H.014.02.0.00	O RING(FOR DELIVERY TUBE)	2	
*42	4H.1613.07.0.00	O RING FOR INJECTOR SLEEVE	8	
*43	4H.1625.26.0.PR	O RING FOR ROCKER COVER	1	
*44	4H.1641.02.0.00	`O' RING	1	
*45	4H.1659.13.0.PR	O RING FOR UNION NUT OF M22X1.5 SIZE	4	
*46	4H.224.16.0.PR	O-RING (FOR SPACER BETWEEN TURBO & AIR PIPE)(4K1080 4V)	2	
*47	6H.985.06.0.00	O RING	1	
*48	F6.024.47.0.00	O - RING FOR DRAIN PLUG	2	
*49	F6.889.05.0.00	O'RING (FOR K27 TURBO OUTLET)	1	

TITLE: - SET OF BEARINGS (HA 04 & 4H)

SR.NO.	PART NO.	DESCRIPTION	QTY.	REMARKS
		SET OF MAIN BEARINGS		
*1	M.074.4.00.003	MAIN BEARING HA STD.	1	(5 PAIRS) STD.
*2	M.074.4.00.013	MAIN BEARING HA	1	0.25mm U/S
*3	M.074.4.00.023	MAIN BEARING HA	1	0.50mm U/S
*4	M.074.4.00.033	MAIN BEARING HA	1	0.75mm U/S
*5	M.074.4.00.043	MAIN BEARING HA	1	1.00mm U/S
*6	M.074.4.00.053	MAIN BEARING HA	1	1.25mm U/S
*7	M.074.4.00.063	MAIN BEARING HA	1	1.50mm U/S
		SET OF CONROD BEARINGS		
*8	B.074.4.00.003	CONROD BEARING HA STD.	1	(4 PAIRS) STD.
*9	B.074.4.00.013	CONROD BEARING HA	1	0.25mm U/S
*10	B.074.4.00.023	CONROD BEARING HA	1	0.50mm U/S
*11	B.074.4.00.033	CONROD BEARING HA	1	0.75mm U/S
*12	B.074.4.00.043	CONROD BEARING HA	1	1.00mm U/S
*13	B.074.4.00.053	CONROD BEARING HA	1	1.25mm U/S
*14	B.074.4.00.063	CONROD BEARING HA	1	1.50mm U/S
		SET OF THRUST WASHERS		
*15	W.073.7.00.003	THRUST WASHER SET KHD (2 TOP+ 2 BOTTOM)- 4 N0S)	1	ONE SET